QUALIFICATION CERTIFICATE

FUGITIVE EMISSIONS			
Testing Standard Compliance		**ISO 15848-1 2006**	**TA LUFT VDI 2440**
Extended Standard Compliance		**ISO 15848-1:2015 & TA LUFT:2021**	
Report nº		201500280-C001	201500280-C002
Certification Body		TÜV SÜD	
Series		Floating ball valves design XF / CF / BF / SF / DF / QF XFH / CFH / BFH / SFH / DFH / QFH XFM-A / CFM-A / BFM-A / SFM-A /DFM-A / QFM-A	
Size		DN100 and below	
Design Type		FS – Fire Safe	
Applicable pressure		Up to CL800	
Packing		GRAPHITE + PEEK + FKM	
Seals		C-RPTFE + GRAPHITE	
Temperature Class		- 46ºC to RT	
Performance Class		500 cycles (BH CO1)	500 cycles
Stem diameter		M16: 8 to 32 mm	
Stem seal	**Measured leakage**	4×10^{-6} atm·cm^3·s^{-1}	
	Allowable leakage	$2{,}8 \times 10^{-5}$ atm·cm^3·s^{-1}	5×10^{-6} atm·cm^3·s^{-1}
Body parts	**Measured leakage**	< 50 ppmV	NA
	Allowable leakage	≤ 50 ppmV	NA

Three pieces

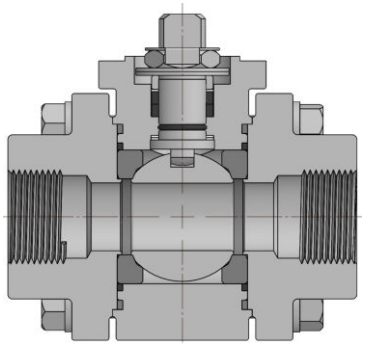

Two pieces

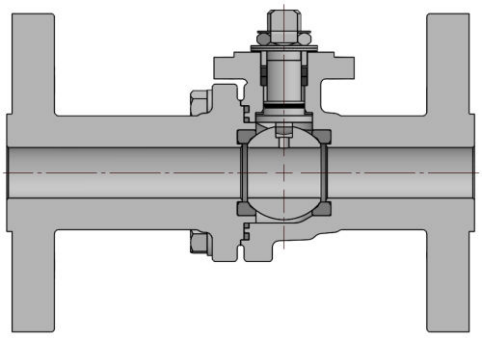

José Jacinto
Technical Responsible

QUALIFICATION CERTIFICATE

FUGITIVE EMISSIONS			
Applicable Standard Compliance	**ISO 15848-1:2015**		
Extended Standard Compliance	**TA LUFT:2021**		
Report nº	PTC24.04176.5308		
Certification Body	SGS		
Series	Floating ball valves design	Trunnion ball valves design	
	BF / BFH / BFM-A CF / CFH / CFM-A SF / SFH / SFM-A XF / XFH / XFM-A	CTR / CTH / CTM-A	VTR / VTH / VTM-A
Size	DN150 to DN200	DN65 to DN300	DN65 to DN100
Design Type	FS – Fire Safe		
Applicable pressure	Up to CL300		
Packing	FKM + GRAPHITE		
Seals	FKM + GRAPHITE		
Temperature Class	RT to 200ºC		
Performance Class	205 cycles (AH CO1)		
Stem diameter	M42: 21 to 84 mm		
Stem seal – **Measured leakage**	$7{,}1 \times 10^{-6}$ mbar.l.s^{-1}		
Stem seal – **Allowable leakage**	$7{,}49 \times 10^{-6}$ mbar.l.s^{-1}		
Body parts – **Measured leakage**	22 ppmV		
Body parts – **Allowable leakage**	≤ 50 ppmV		

Floating (Three pieces)

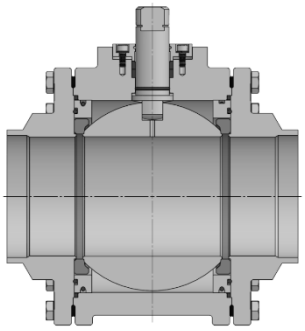

Floating (Two pieces)

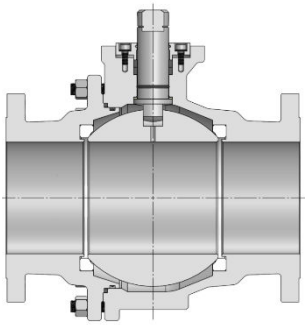

Trunnion (Three pieces)

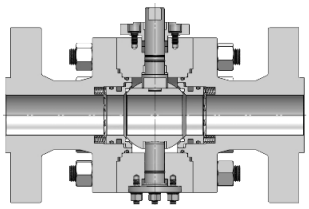

Trunnion (Two pieces)

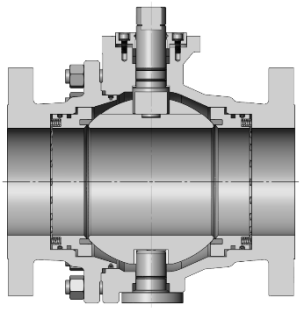

José Jacinto
Technical Responsible

The tests were carried out in accordance with ISO 15848-1:2006/2015 and TA Luft:2002, as indicated in the referenced "**testing standard compliance**". Since these standards have been updated – the latest editions being ISO 15848-1:2015+A1:2017 and TA Luft:2021 – it is necessary to evaluate the differences to confirm compliance with the current requirements. Based on the assessment presented in the following table, it can be confirmed that the tests performed remain in compliance with ISO 15848-1:2015+A1:2017 and TA Luft:2021.

Changes	**ISO 15848-1:2006**	**ISO 15848-1:2015**
RT Room temperature	-29ºC to 40ºC	5ºC to 40ºC
CO1 Number of cycles	500	205
Class AH Leakage rate	$1{,}76 \times 10^{-8}$ atm·cm^3·s^{-1} mm^{-1} $1{,}78 \times 10^{-8}$ mbar·l·s^{-1} mm^{-1} (per diameter)	$1{,}76 \times 10^{-7}$ atm·cm^3·s^{-1} mm^{-1} $1{,}78 \times 10^{-7}$ mbar·l·s^{-1} mm^{-1} (per diameter)
Changes	**TA LUFT:2002**	**TA LUFT:2021**
Leakage rate	TA LUFT para. 5.2.6.4 VDI 2440 para. 3.3.1.3	TA LUFT para. 5.2.6.4 defines ISO 15848:1 or similar has testing procedure
	1×10^{-4} mbar l s^{-1} m^{-1} (per perimeter) $3{,}14 \times 10^{-7}$ mbar l s^{-1} mm^{-1} (per diameter)	Leakage rate required: ≤ 40 bar @ ≤ 200ºC: 1×10^{-4} mg / s^{-1} m^{-1} (per perimeter) For other PT conditions 1×10^{-2} mg / s^{-1} m^{-1} (per diameter) ISO 15848-1:2015 **BH leakage rate** 1×10^{-4} mg / s^{-1} m^{-1} (per perimeter) $1{,}78 \times 10^{-6}$ mbar·l·s^{-1} mm^{-1} (per diameter) **CH leakage rate** 1×10^{-2} mg / s^{-1} m^{-1} (per perimeter) $1{,}78 \times 10^{-4}$ mbar·l·s^{-1} mm^{-1} (per diameter)

ITIS B.V.
Daniëlsweg 6
NL-4451 HP Heinkenszand
T + 31 113 568515
info@itis-nl.com
www.itis-nl.com

ITIS Certificate
201500280-C001

Industrie Service

ISO 15848-1 QUALIFICATION CERTIFICATE

This certificate is to certify that the valve below has been tested according to standard: Industrial valves - Measurement, test and qualification procedures for fugitive emissions - Part 1: Classification system and qualification procedures for type testing of valves (ISO 15848-1:2006)

Test valve details

Manufacturer	:	Vinco Valvulas S.A.
Address	:	Rua do Progresso, Lote 15, 4760-841, Vilarinho das Cambas, Portugal
Nominal size	:	1 ¼ inch
Pressure rating	:	800lbs
Valve Type	:	FL Ball Valve
Valve Serial number	:	2015LF220029002
Drawing number	:	E059-01-50 (17-06-2015)
Body material	:	F316/316L
Body gaskets mat.	:	1st Soft carbon, 2nd Graphite
Stem material	:	F316/316L
Stem seal material	:	Graphite + PEEK
Stem seal brand	:	Vinco
Stem diameter (OD_{stem})	:	16.2mm
Gland torque	:	25Nm at start of the tests.

Valve qualification range: (see par. 8 of ISO 15848-1)

Description	Tested valve	Scope
Stem Seal Material Type	Graphite+PEEK	Graphite+PEEK
Gland torque	25Nm	25Nm
Stem Diameter	16.2mm	8.1mm to 32.4mm
Body seal	1st Soft carbon, 2nd Graphite	1st Soft carbon, 2nd Graphite
Class	800	800 and below
Temperature Class	RT to -46°C	RT to -46°C
Tightness Class	BH	BH
Performance class: ISO FE BH — CO1 — SSA 0 —t(RT,-46°C) — CL800 — ISO 15848-1		

This certificate must be read in conjunction with the full ITIS BV test report number 201500280-R001

Name (ITIS)		Name authority (TÜV SÜD)
J. Meijer 13-07-2015		P. Deleu 13-07-2015

ITIS B.V.
Daniëlsweg 6
NL-4451 HP Heinkenszand
T + 31 113 568515
info@itis-nl.com
www.itis-nl.com

ITIS Certificate
201500280-C002

Industrie Service

VALVE TEST QUALIFICATION CERTIFICATE

This certificate is to certify that the measured leak rates during the endurance test at room temperature and at -46°C on the test valve below, were within the limits according to the requirements of TA LUFT (Technische Anleitung zur Luft par. 5.2.6.4) Vom 24. Juli 2002 and VDI 2440 par. 3.3.1.3 November 2000, for 500 cycles at room temperature and 46°C.

Test valve details

Manufacturer	:	Vinco Valvulas S.A.
Address	:	Rua do Progresso, Lote 15, 4760-841, Vilarinho das Cambas, Portugal
Nominal size	:	1 ¼ inch
Pressure rating	:	800lbs
Valve Type	:	FL Ball Valve
Valve Serial number	:	2015LF220029002
Drawing number	:	E059-01-50 (17-06-2015)
Body material	:	F316/316L
Body gaskets mat.	:	1st Soft carbon, 2nd Graphite
Stem material	:	F316/316L
Stem seal material	:	Graphite + PEEK
Stem seal brand	:	Vinco
Stem diameter (OD_{stem})	:	16.2mm
Gland torque	:	25Nm at start of the tests.

Description	Tested valve
Stem seal material	Graphite + PEEK
Stem Ø/circumference	Ø0.0162m / 0.051m
Body/Bonnet gasket material	1st Soft carbon, 2nd Graphite
Class	800lbs
Temperature Class	Room temperature and -46°C
Operational Cycles	500

This certificate is only valid in conjunction with the full ITIS BV test report number 201500280-R002

Name (ITIS)		Name Authority (TÜV SÜD)
P. van Tol	15-07-2015	P. Deleu 15-07-2015

TESTED
REVIEW
WITNESSED
Date/Signature
Industrial Testing & Inspection Services

TÜV SÜD Industrie Service GmbH

CERTIFICADO DE ENSAIO TIPO
DE ACORDO COM ISO 15848-1

Type Test Certificate according to ISO 15848-1

Certificado Nº: **PTC24.04176.5308**
Certificate no

Job	***J24.0527.I&E.111***
Manufacturer	***VINCO Válvulas, S.A.***
Test Place	***Rua do Progresso, Lote 15, Vilarinho das Cambas***
Test Date	***03/07/2024 to 05/07/2024***
Standard(s) Used	***ISO 15848-1: 2015***
Type	***TR – Trunnion Ball Valves***
DN	***150***
Class	***300***
Reference Nº	***CT.T R01/2024.R00***
Material	***Body/End: A216 WCB*** ***Ball: A479 316/L*** ***Stem: A479 316/L*** ***Body Seals: FKM + GRAPHITE*** ***Stem Packing System: FKM + GRAPHITE***
Stem dimension	***M42 (42 mm)***
Test Report Nº	***CT.03/2024.R00***

All the following values were determined and recorded together with temperatures, cycles nº and pressures on fugitive emissions test report

Result of Tests ***Satisfactory***

It was performed by Vinco Válvulas, S.A. the following tests:

1- *Production tests*
2- *Mechanical cycles at RT and T_{Test}*
3- *Leakage measurement through stem and body during mechanical cycles period*
4- *Visual inspection*

Packing Torque	***10 Nm at start of the tests***
Endurance class	***CO1***
Temperature class	***t(RT, 200 °C)***
Tightness class	***AH***
Performance class	***ISO FE AH – CO1 – SSA 0 – t(RT, 200 °C) – CL300 – ISO 15848-1***

This is to certify that the type test has performed by VINCO Válvulas, S.A., under our witness as above, and the results are SATISFIED with the requirements of ISO 15848-1 for the above product, so SGS PORTUGAL, S.A. hereby confirm the qualification as follows:
STEM DIMENSION: M21 to M84
CLASS RATING: 300 and below

Date: ***10/07/2024***

SOCIEDADE GERAL DE SUPERINTENDÊNCIA SGS Felgueiras

Carlos Felgueiras
Technical Responsible

Este documento foi emitido pela Companhia de acordo com as Condições Gerais de Serviço disponíveis em http://www.sgs.com/terms_and_conditions.htm. Chama-se especial atenção às cláusulas referentes aos limites de responsabilidade, indemnização e jurisdição.
Informa-se qualquer portador deste documento que a informação nele contida reflecte apenas as constatações da Companhia na altura da sua intervenção e dentro dos limites das instruções do Cliente, se existentes. A Companhia apenas é responsável perante o seu Cliente e este documento não exonera as partes envolvidas numa transacção de exercerem todos os seus direitos e obrigações à luz da documentação dessa transacção. Qualquer alteração não autorizada, adulteração ou falsificação do conteúdo ou aparência deste documento é ilegal e os transgressores poderão ser alvo de todas as acções legais previstas.

SGS ICS, Lda
Pólo Tecnológico de Lisboa, Rua Cesina Adães Bermudes, Lote 11, nº1, 1600-604 Lisboa, t(+351)217 104 200
Parque Comercial do Chiolo (N14), Estrada Nacional 14, 2504 - Lugar Chiolo, 4475-045 Maia t(+351)229 994 500
Capital Social 5.000 Euros - Reg. Com. de Lisboa e Contribuinte n.º 500417660 - pt.info@sgs.com - www.sgs.pt - Linha SGS: 808 200 747