CFM Series

Installation
Operation
Maintenance



Metallic Floating Ball Valves – Abrasive Media
FB DN 15-100
Class 150/300 | PN 16/40

IOM.MET.CFM.EN.R00

Index

I. Scope 2
II. Applicability 2
III. Storage 2
IV. Installation 2
i. Installation of end connections 2
Installation of flanged end ball valves 2
V. Operation 3
VI. Maintenance 3
i. Preventive maintenance 3
ii. Corrective maintenance 3
Disassembly Instructions 3
Replacement and Reassembly Instructions 3
iii. Disposal 4
VII. Exploded parts view 5

I. Scope

This manual intends to assist the customers or the end users in storage, installation, operation and maintenance of Vinco Válvulas ball valves. Subsequent additions and special instructions to the present manual will be provided in case of specific customer requirements and/or critical services.

This manual shall be analysed before any procedure. Additional or particular information can be requested through email at vinco@vincovalves.com.

II. Applicability

The Table 1 - Sizes and pressure classes identifies the range available in this series.

Table 1 - Sizes and pressure classes

DN		Pressure classes			
FB		150	300	PN 16	PN 40
½"	15	x	x	-	x
¾"	20	x	x	-	x
1"	25	x	x	-	x
1¼"	32	-	-	-	x
1½"	40	x	x	-	x
2"	50	x	x	-	x
2½"	65	x	x	x	x
3"	80	x	x	x	x
4"	100	x	x	x	x

III. Storage

If the valves **are not intended to immediate use** follow the next recommendations to prevent damage:

- It is advisable to keep the valves in the original packing in a dry place during all the period of storage, protecting against environments like: humidity, rain, dust, dirt, sand, mud, salt air and seawater;
- The valves shall remain in the open position to prevent damaging the seats;
- When the valves are stored for a long period of time, they should be checked with a periodicity of six months;
- The internal surfaces of the valves shall be inspected to guarantee the absence of dust or other foreign parts;
- The valve should be operated for at least two complete cycles before re-store.

IV. Installation

Cautions before installation of the valves:

- The valve should be checked for possible transport or storage damages. Inspect the interior to assure cleanliness and that is free of dust or other residues;
- The valve should be in the **OPEN** position to prevent seat damage;
- During the cleaning operations, be aware of using an adequate solvent to prevent damage to the seats or others;
- Verify that the application does not exceed the pressure and the temperature limits available on the nameplate;
- The valve cannot be modified without a prior permission and/or recommendation of the manufacturer.

i. Installation of end connections

The project of the installation shall assure adequate supports to avoid tension as flexion, torsion or other, on the equipments, to prevent damage and the occurrence of internal or external leakage.

Installation of flanged end ball valves

1. Use the correct size of the studs, nuts and seals for the respective flange;
2. Ensure the correct alignment of the flanges and tighten. Adjust the position of the valve if necessary.

V. Operation

- After installation, operate the lever to open and close the valve. If it offers resistance, it should be necessary to disassemble the valve for adjust the position of the ball. This is more frequent in the welded short ends because of the disassemble of the body which can move the ball;
- Before starting continuous operation of the valve, it is advisable to pressurize the line to the service conditions. Check that installation is correct and do not have any leakage;
- If available, measure the valve torque comparing it with the nominal torque presented in Table 4 - Valve Torque Figure [Nm]. Note that nominal torque is measured at fully differential pressure which may result in a higher torque than the torque measured at the service conditions;
- To maximize a longer life of the seats, the valve should be used in complete **OPEN** or **CLOSED** position;
- The valve is in the fully opened position when the handle is in line with the pipe. In the fully closed position, the handle is perpendicular to the pipe;
- In processes with significant service pressure variation, it is important to note that some internal leakage can occur for a certain period of time, especially when the pressure goes from high to low levels. This is a consequence of the seat deformation which requires some stabilization time to allow the elastic recovery of the seats.

VI. Maintenance

This chapter intends to help the end user maintaining the valve working in good conditions. There are presented two maintenance programs: preventive and corrective.

i. Preventive maintenance

Every six months[1] it is advisable to check the general conditions of the valve. This evaluation shall be performed with the valve in line at the service conditions. Some steps should be performed to check the correct working of the valve:

1. Check for damage as corrosion in the valve. If severe corrosion is installed it is advisable to replace the valve;
2. Check for leakage between the body and the end connection as well on the top of the stem. If necessary, re-tighten the bolting system according to Table 2 – Body bolting system Torque [Nm] and Table 3 - Packing system Torque [Nm]. If leakage remains, the valve should be disassembled to verify and/or replace the sealing components. Attend to next subchapter for instructions.

ii. Corrective maintenance

If the valve presents leakage, defect and/or malfunction it is advisable to disassemble the valve to check the conditions of the components and seals. Disassembly, replacement and reassembly instructions are detailed below to aid identification defects and replacement needs to ensure optimal service conditions. To guide the instructions, attend to Figure 1 – Exploded parts view.

Disassembly Instructions

1. The valve shall be in the **OPEN** position;
2. Depressurize the line and remove the valve;
3. Unscrew the body bolting system (ex.: bolts or studs/nuts) and separate the sealing components (ex.: seats, seals, etc);
4. Place the valve in the **CLOSED** position and remove the ball. Note that this is the only allowable position to perform this operation;
5. Unscrew the lever system and remove the packing system (ex.: washers, seals, packing, bolts, gland, stop pin, etc). For the sizes where a gearbox is applicable, remove the gearbox and the coupling system. During the operation, hold the stem to prevent damage;
6. Remove the stem and the sealing components (ex.: o'rings and/or seals). Note that the stem is removed through the body cavity;
7. The nameplate, if applicable, shall not be removed.

With the valve fully disassembled check all components for any defect, corrosion signs and mechanical damage. Clean the components.

Replacement and Reassembly Instructions

After disassembly some components should be analysed in detail and replaced if damaged. Note that this valve range is appropriate for abrasive service, namely small particles. However, under certain specific conditions, premature wearing may occur in the ball and seat coating:

- The sealing components (ex: seats, seals, packing and o'rings) should be replaced;
- The ball should be replaced if any defect is found in its surfaces;

[1] The time between inspections may vary depending on the operating conditions.

- The nameplate should be replaced if information is unreadable.

Other components can be also check and replaced depending on the damage presented. Repair kits can be supplied upon request. Contact vinco@vincovalves.com for additional information.

After maintenance and replacement, the valve should be reassembled according to the following instructions:

1. Assemble the sealing components of the stem;
2. Insert the stem into the body and hold it to prevent damage;
3. Place the packing system and tighten according to Table 3 - Packing system Torque [Nm];
4. Place the lever system. For the sizes where a gearbox is applicable, assemble the coupling system and the gearbox;
5. Place the valve in the **CLOSED** position;
6. Insert the ball into the body and rotate the lever twice to check that the ball rotates freely. Leave the valve in the **OPEN** position;
7. Insert the sealing components into the body and tighten according to Table 2 – Body bolting system Torque [Nm];
8. Recheck if the ball rotates freely.

After reassembly the valve should be tested in the line according to the chapter Operation.

Table 2 – Body bolting system Torque [Nm]

DN	Md	Torque	Md	Torque	Md	Torque	Md	Torque
FB	150		300		PN 16		PN 40	
15	6	5	6	5	-	-	6	5
20	8	15	8	15	-	-	8	10
25	8	15	8	15	-	-	8	10
32	-	-	-	-	-	-	10	20
40	10	30	10	30	-	-	10	20
50	10	30	10	30	-	-	10	20
65	12	55	12	55	12	35	12	35
80	14	85	14	85	14	60	14	60
100	14	85	16	120	14	60	16	90

Table 3 - Packing system Torque [Nm]

DN / FB	Md	Torque
15	6	5
20	6	5
25	6	5
32	8	10
40	8	10
50	10	20
65	10	20
80	12	35
100	12	35

Table 4 - Valve Torque Figure [Nm]

DN	Break Torque* TCC / CCC			
FB	150	300	PN 16	PN 40
15	18	20	-	20
20	25	30	-	27
25	30	50	-	45
32	-	-	-	60
40	65	100	-	90
50	100	150	-	130
65	150	150	150	150
80	250	250	250	250
100	350	350	350	350

* at full differential pressure

iii. Disposal

Vinco ball valves are composed of various recyclable materials. Concerning environmental issues, it is advisable to dispose the materials according to the national regulations and deliver them to specialized recycling companies.

Be aware that the valve can still have some remaining residues of the working fluid. If the fluid is toxic, corrosive or other, inform the recycling company to prevent damage and dangerous disposal.

VII. **Exploded parts view**

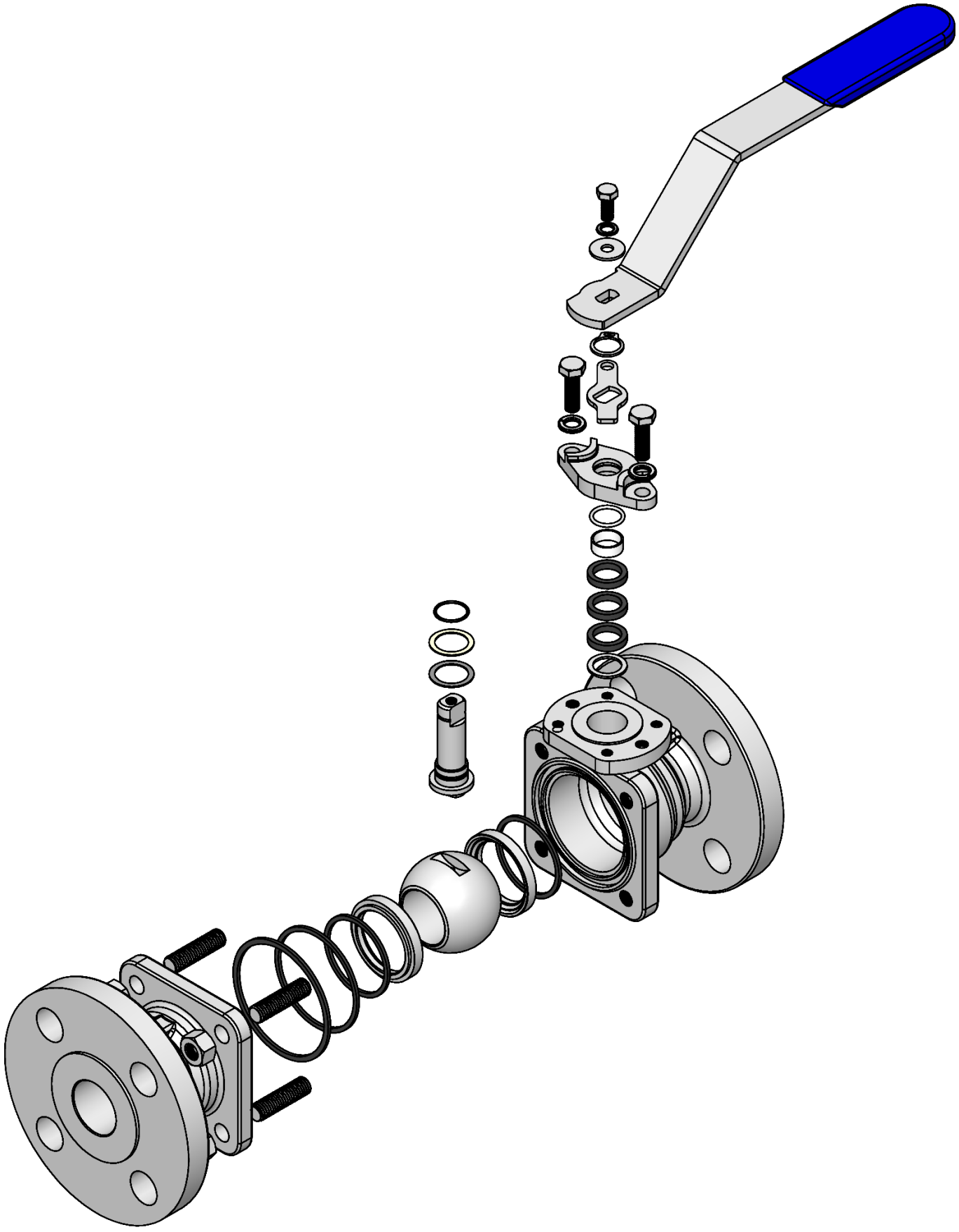

DN 15 (½”) to 40 (1½”)

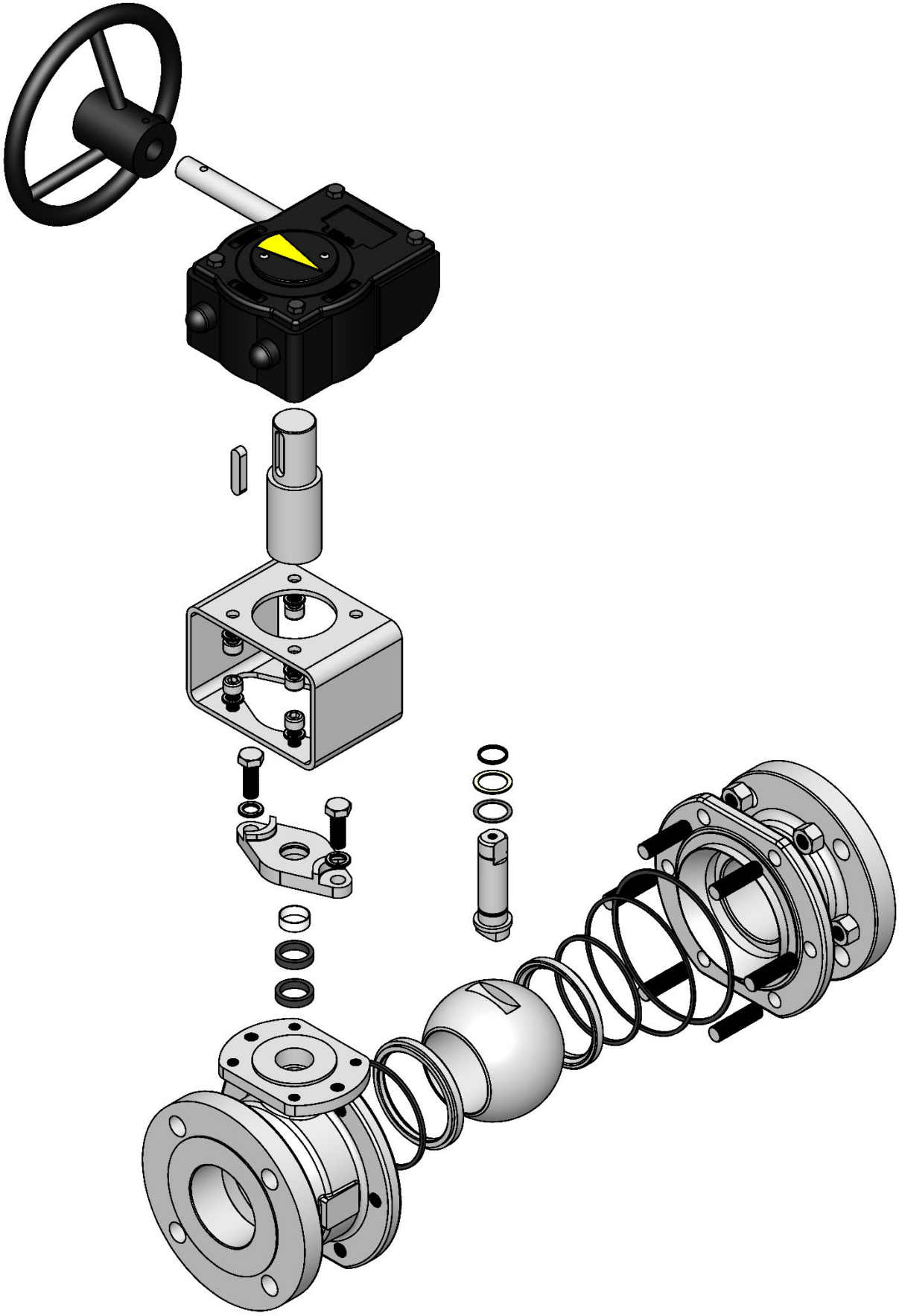

DN 50 (2”) to 100 (4”)

Figure 1 – Exploded parts view

Metallic Range

XFM Series
3 piece bolted – Floating
Antistatic
Cl 600/400/300
DN ⅜” (10) to 4” (100)



CFM Series
2 piece bolted – Floating
Antistatic
Cl 150/300 | PN 16/40
DN ½” (15) to 4” (100)



Sanitary Range
RP / XP / LP / MP / QP



Cryogenic Range
CCF / CXF / CVT / CCT



Industrial Range
CF / XF / SF / BF / HF / CTR / VTR



Rua do Progresso, Lote 15, Vilarinho das Cambas
4760-841 Vila Nova de Famalicão – Portugal

vinco@vincovalves.com
www.vincovalves.com