CFM-A Series

Cast Version

Technical Datasheet

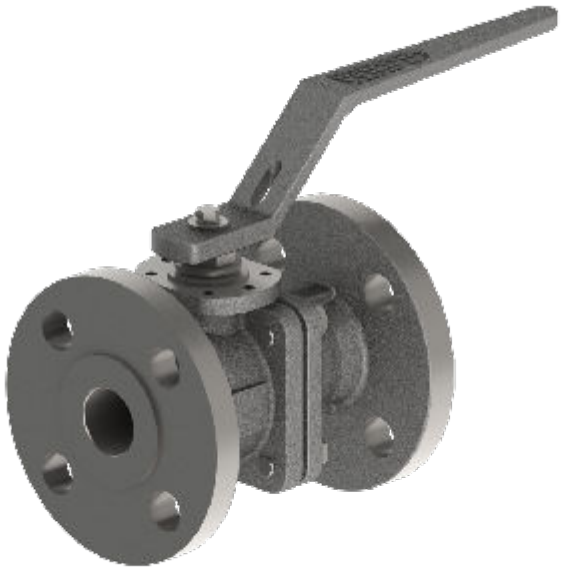



Metal Seated Floating Ball Valves
Abrasive Media
FB DN 15 (½") to DN100 (4")
PN40 / PN16
-100 °C to 250 °C

CFM-A SERIES

PN40

FULL BORE - DN15 (½") ÷ DN50 (2")

STANDARD DIN

BILL OF MATERIALS

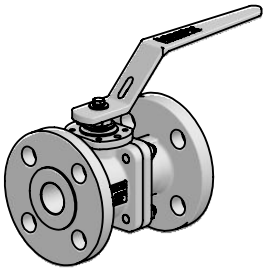

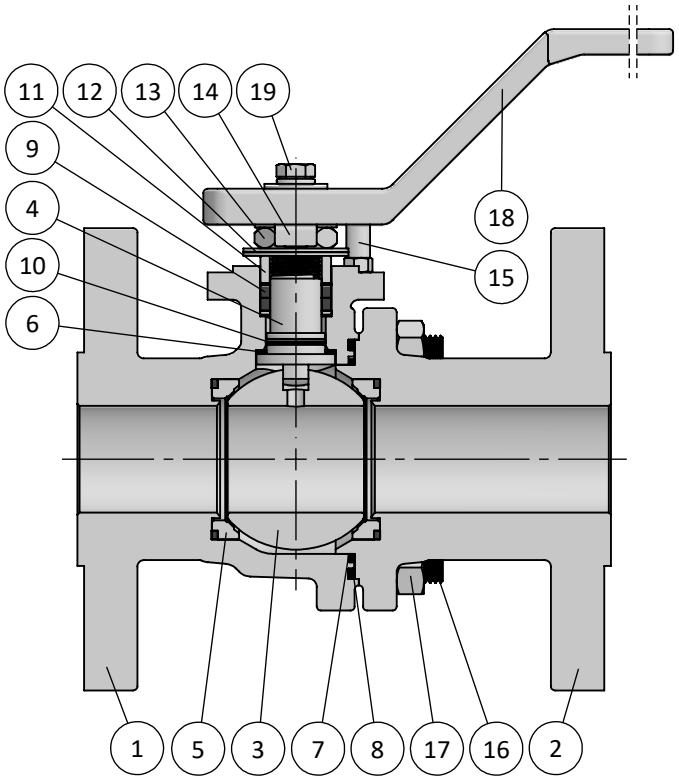

BILL OF MATERIALS					
Part	**Qt.**	**Description**	**CARBON STEEL VERSION**	**LT CARBON STEEL VERSION**	**STAINLESS STEEL VERSION**
1	1	Body	1.0619	1.6220	1.4408
2	1	End	1.0619	1.6220	1.4408
3	1	Ball	A351 CF8M + TCC		
4	1	Stem	A564 S17400		
5	2	Seat	A479 316/L + TCC + GRAPHITE		
6	1	Stem Thrust Seals ↘	C-RPTFE + PEEK		
7	1	1st Body Seal ↘	C-RPTFE		
8	1	2nd Body Seal ↘	GRAPHITE		
9	1	Stem Packing Set ↘	GRAPHITE		
10	1	O'Ring ↘	FKM		
11	1	Gland Packing	STAINLESS ST. 316		
12	2	Disc Spring	STAINLESS ST. 316		
13	1	Stem Nut	STAINLESS ST. 316		
14	1	Locking Clip	STAINLESS ST. 316		
15	1	Stop Indicator	STAINLESS ST. 316		
16	-	Stud	Gr.8.8 Zinc.	A4 CL.70	
17	-	Nut	Gr. 8 Zinc.	A4 CL.70	
18	1	Handle	A351 CF8		
19	1	Handle Fastener	STAINLESS ST. 316		

↘ TYPICAL SPARE PARTS

CFM-A SERIES

PN40

FULL BORE - DN15 (½") ÷ DN50 (2")

DIN FLANGED ENDS

OVERALL DIMENSIONS

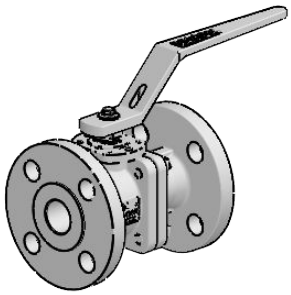

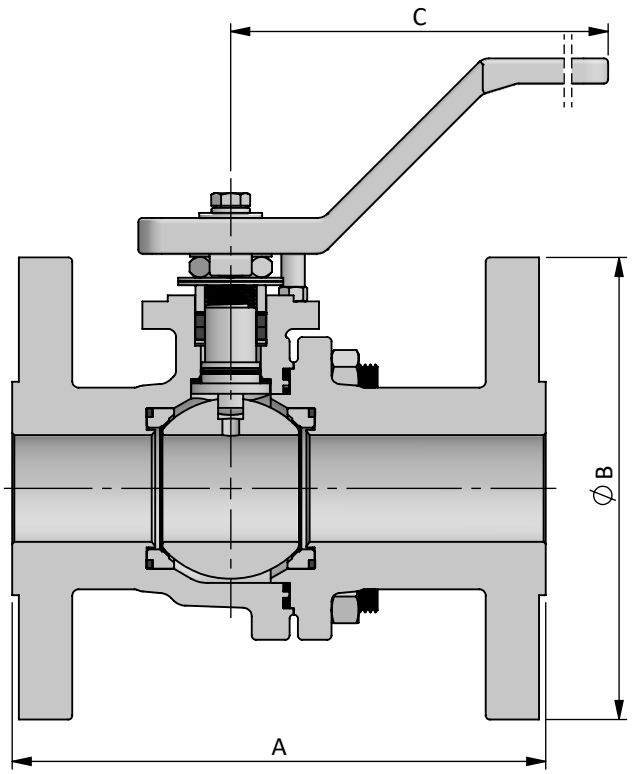

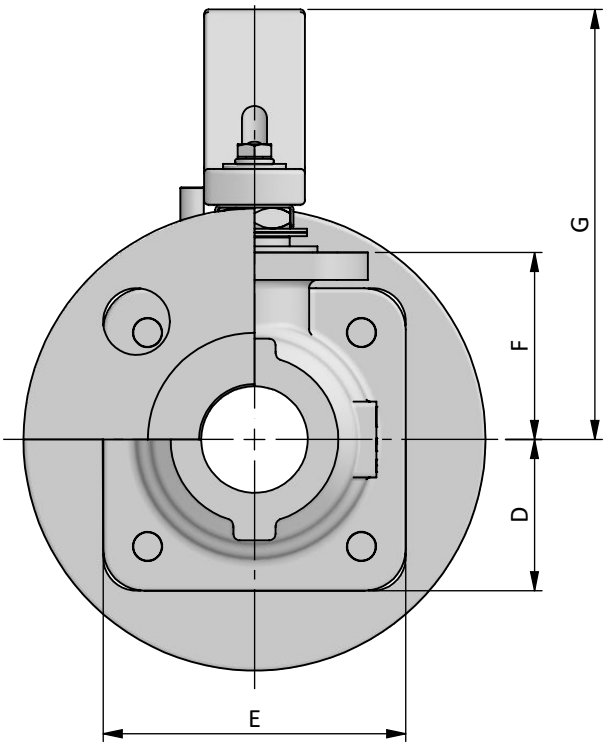

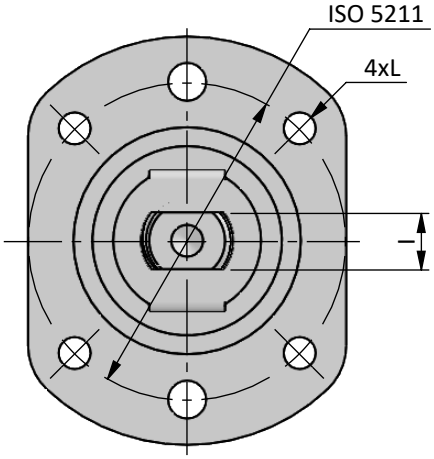

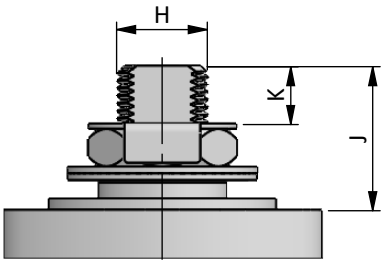

DN / Size		Dimensions										Automation						Weight Approx. [kg]	
FULL BORE		Ball Port	PN40				C	D	E	F	G	H	I	J	K	L	ISO 5211		
			F1		F4														
mm	inch		A	B	A	B												F1	F4
15	½"	15.1	130	95	115	95	180	27.5	55	35	90	10	6	15	5.5	M5	F04	3	2.5
20	¾"	20.6	150	105	120	105	180	32.5	65	40	100	12	7.5	20	8	M5	F04	4	3.5
25	1"	25.4	160	115	125	115	180	37.5	75	45	105	12	7.5	20	8	M5	F04	4.5	4
32	1¼"	31.8	180	140	130	140	210	42.5	85	55	125	16	11	22	8.5	M6	F05	6.5	6
40	1½"	38.1	200	150	140	150	210	47.5	95	60	130	16	11	22	8.5	M6	F05	8.5	7.5
50*	2"	49	230	165	150	165	300	65	Ø145	80	150	20	14	26	9	M8	F07	14	12

* Valve construction is similar to DN65 ÷ DN100 (page 4-5)

CFM-A SERIES

PN16 / PN40

FULL BORE - DN65 (2½") ÷ DN100 (4")

STANDARD DIN

BILL OF MATERIALS

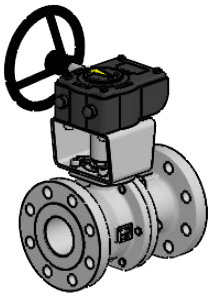

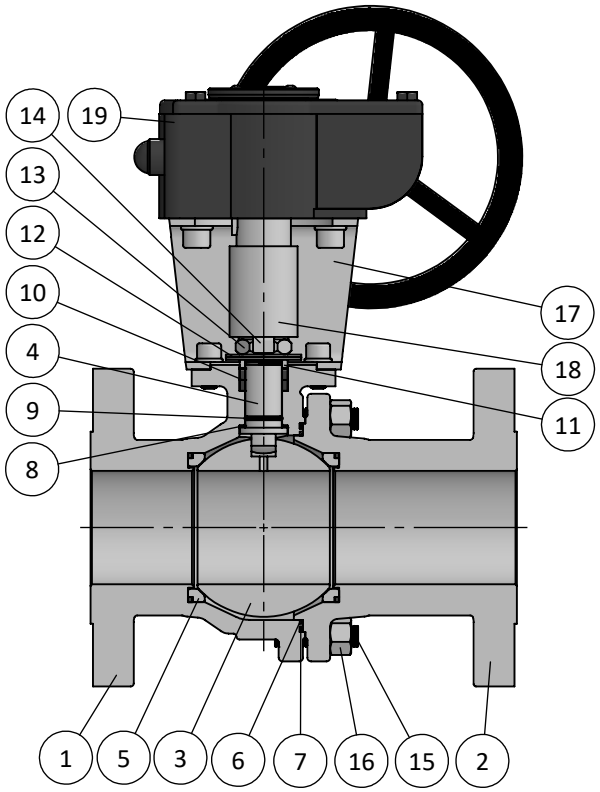

BILL OF MATERIALS					
Part	**Qt.**	**Description**	**CARBON STEEL VERSION**	**LT CARBON STEEL VERSION**	**STAINLESS STEEL VERSION**
1	1	Body	1.0619	1.6220	1.4408
2	1	End	1.0619	1.6220	1.4408
3	1	Ball	A351 CF8M + TCC		
4	1	Stem	A564 S17400		
5	2	Seat	A479 316/L + TCC + GRAPHITE		
6	1	1st Body Seal ↘	C-RPTFE		
7	1	2nd Body Seal ↘	GRAPHITE		
8	1	Stem Thrust Seals ↘	C-RPTFE + PEEK		
9	1	O'Ring ↘	FKM		
10	1	Stem Packing Set ↘	GRAPHITE		
11	1	Gland Packing	STAINLESS ST. 316		
12	2	Disc Spring	STAINLESS ST. 316		
13	1	Stem Nut	STAINLESS ST. 316		
14	1	Locking Clip	STAINLESS ST. 316		
15	-	Stud	Gr.8.8 Zinc.	A4 cl.70	
16	-	Nut	Gr. 8 Zinc.	A4 cl.70	
17	1	Bracket	STAINLESS ST. 304		
18	1	Bracket Stem	A479 316/L		
19	1	Gearbox	CAST IRON		

↘ TYPICAL SPARE PARTS

CFM-A SERIES

PN16 / PN40

FULL BORE - DN65 (2½") ÷ DN100 (4")

DIN FLANGED ENDS

OVERALL DIMENSIONS

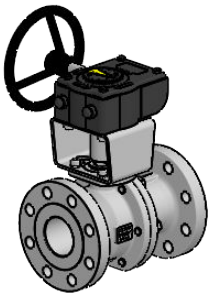

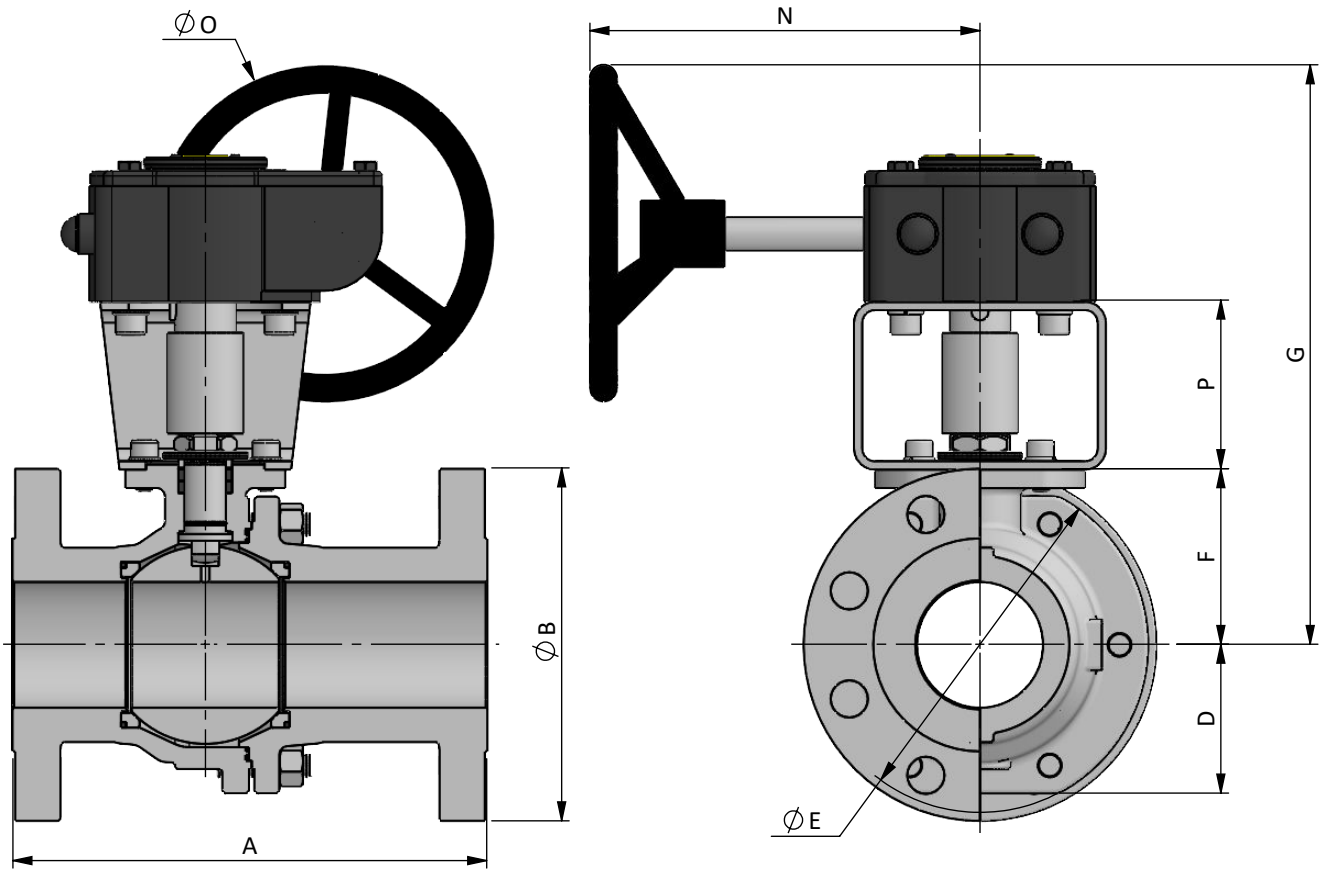

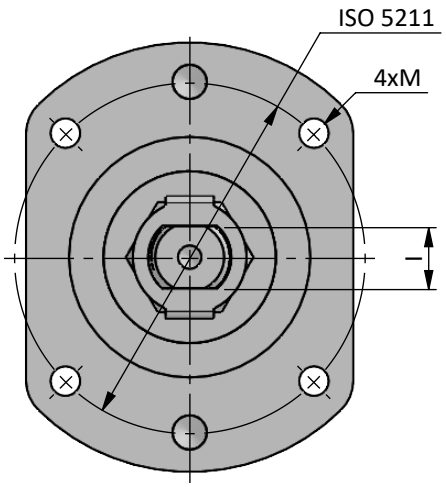

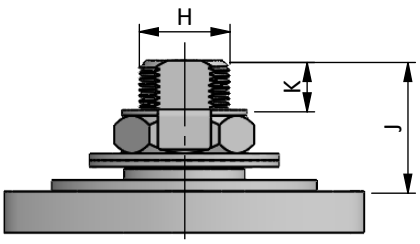

DN / Size		Dimensions													Automation									Weight Approx. [kg]			
FULL BORE		Ball Port	PN16				PN40				D	E	F	G	H	I	J	K	M	N	O	P	ISO 5211	PN16		PN40	
			F1		F4		F1		F4																		
mm	inch		A	B	A	B	A	B	A	B														F1	F4	F1	F4
65	2½''	62	290	185	170	185	290	185	170	185	80	175	95	175	24	18	35	14.5	M8	220	200	60	F07	24	21	25	23
80	3''	75	310	200	180	200	310	200	180	200	90	200	105	190	24	18	35	12	M10	220	200	100	F10	33	29	35	31
100	4''	100	350	220	190	220	350	235	190	235	115	250	135	225	30	22	42.5	16.5	M10	285	300	100	F10	51	45	56	48

CFM-A SERIES

PN16 / PN40

FULL BORE - DN15 (½'') ÷ DN100 (4'')

LOCKING DEVICE

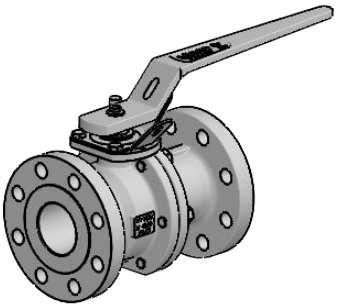

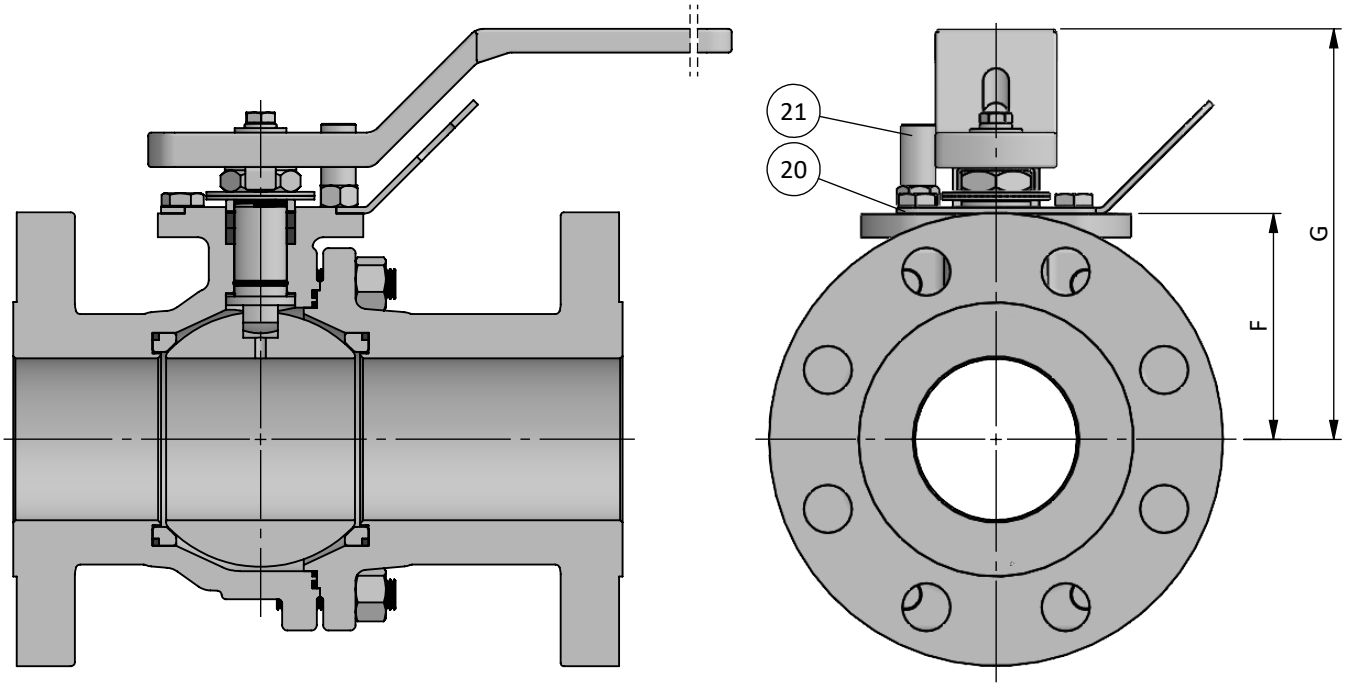

BILL OF MATERIALS			
Part	**Qt.**	**Description**	**Material**
20	1	Locking Plate	STAINLESS ST. 304
21	1	Stop Pin	STAINLESS ST. 316

DN / Size		**Dimensions**	
FULL BORE		**F**	**G**
mm	**inch**		
15	½''	35	90
20	¾''	40	100
25	1''	45	105
32	1¼''	55	125
40	1½''	60	130
50	2"	80	150
65	2½''	GEARBOX	
80	3"		
100	4"		

Larger size valves available with lockable gearboxes

CFM-A SERIES

PN16 / PN40

FULL BORE - DN15 (½'') ÷ DN100 (4")

BRACKET FOR AUTOMATION

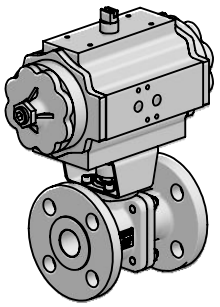

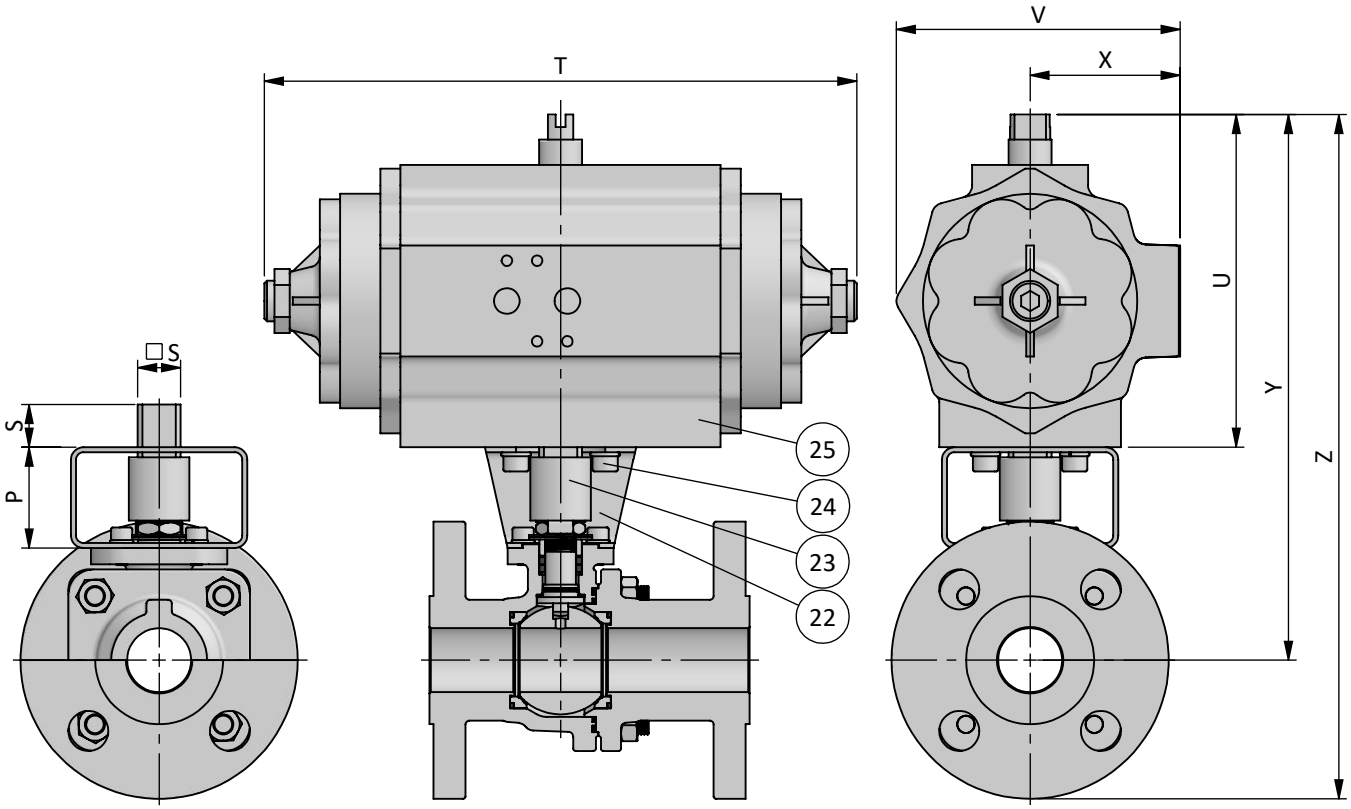

BILL OF MATERIALS

Part	Qt.	Description	Material
22	1	Bracket	STAINLESS ST. 304
23	1	Coupling	A564 S17400
24	8	Bolt	STAINLESS ST. 316
25	1	Pneumatic Actuator	ALUMINIUM

DN / Size		Automation		Actuator*							Automation		Actuator*						
FULL BORE		P	S	PN16							P	S	PN40						
mm	inch			REF.	T	U	V	X	Y	Z			REF.	T	U	V	X	Y	Z
15	½"	-	-	-	-	-	-	-	-	-	30	17	008-10	233	131	112	57	210	255
20	¾"	-	-	-	-	-	-	-	-	-	40	19	012-08	280	131	112	57	215	265
25	1"	-	-	-	-	-	-	-	-	-	40	22	020-14	294	151	133	70	235	295
32	1¼"	-	-	-	-	-	-	-	-	-	50	22	030-18	286	189	169	85	295	365
40	1½"	-	-	-	-	-	-	-	-	-	50	27	040-18	344	199	169	85	310	385
50	2"	-	-	-	-	-	-	-	-	-	60	27	060-20	377	230	195	100	370	450
65	2½"	60	27	060-20	377	230	195	100	385	475	60	27	060-20	377	230	195	100	385	475
80	3"	100	36	140-24	445	272	232	120	480	580	100	36	140-24	445	272	232	120	480	580
100	4"	100	46	200-20	537	272	232	120	505	615	100	46	200-20	537	272	232	120	505	615

*Spring Return Pneumatic Actuators selected for CCC seats considering input air pressure of 5.5bar and minimum 25% safety margin

CFM-A SERIES

PN16 / PN40

FULL BORE - DN15 (½'') ÷ DN100 (4'')

EXTENDED STEM

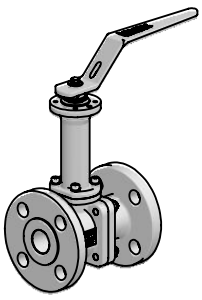

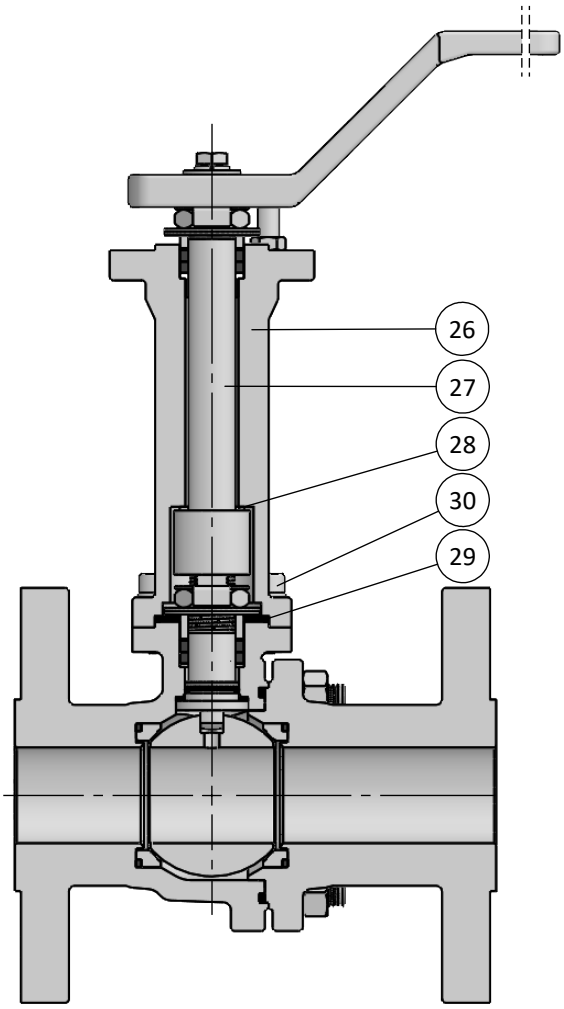

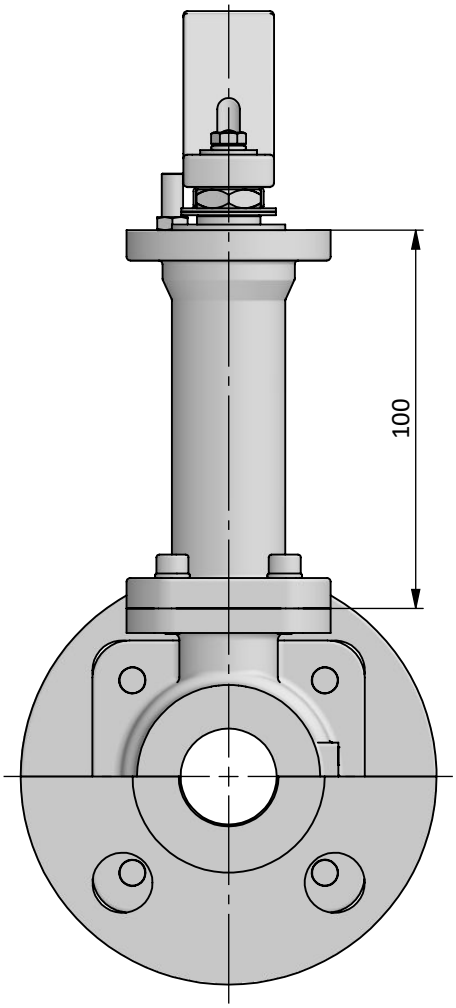

BILL OF MATERIALS

Part	Qt.	Description		Material
26	1	Extension		A351 CF8M
27	1	Stem Extension		A564 S17400
28	1	Stem Thrust Seal	↘	TFM 1600
29	1	Extension Seal	↘	GRAPHITE
30	4	Bolt		STAINLESS ST. 316

CFM-A SERIES

PN16 / PN40

FULL BORE - DN15 (½'') ÷ DN100 (4")

TECHNICAL SPECIFICATIONS

Pressure - Temperature Rating

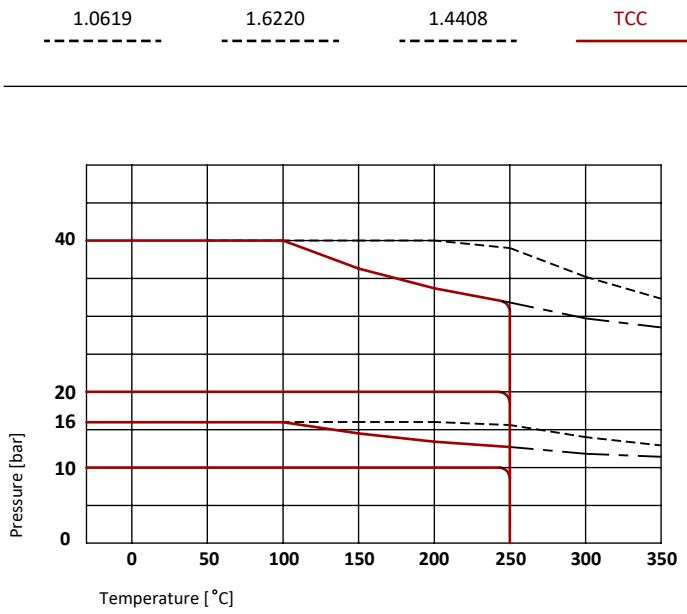

Working Conditions					
Material	mOT* [°C]				MOT* [°C]
	1.0619	1.6220	1.4408		ALL
TCC	-29	-46	-50	-100*	250
TCC	-29	-46	-50		250

*mOT - minimum Operating Temperature.
*MOT - Maximum Operating Temperature at 10 bar
Standard version recommended down to -50°C
*Extended version recommended down to -100°C

TCC - Tungsten Carbide Coating

Tungsten Carbide Coating applied in the contact surfaces of the ball and seats, with a minimum specified thickness of 200 µm, increases the hardness (up to 70 HRC) and the resistance to wearing conditions (abrasion, friction, others).
This technology combined with a lapping process improves the sealing effect and the operation lifetime expectancy without maintenance under severe working conditions.

DN	Rating (bar)	
	PN16	PN40
FB DN15 (½") to DN50 (2")	-	40
FB DN65 (2½") to DN80 (3")	16	20
FB 100 (4")	10	

DN / Size		Torque Valve Figure [Nm] *				Maximum Allowable Stem Torque [Nm]				Flow Coefficient Cv
FULL BORE		PN16		PN40						
mm	inch	Rating [bar]	BTO	Rating [bar]	BTO	MAST				
		TCC				S31803	S32760	S17400	718	
15	½''	-	-	40	20	25	30	40	53.5	15
20	¾''	-	-	40	27	45	55	71.5	98.5	35
25	1''	-	-	40	45	45	55	71.5	98.5	50
32	1¼"	-	-	40	60	125	150	200	275	80
40	1½''	-	-	40	90	125	150	200	275	115
50	2"	-	-	40	130	240	290	385	535	200
65	2½''	16	150	20	150	445	540	715	1000	325
80	3"	16	250	20	250	445	540	715	1000	490
100	4"	10	350	10	350	880	1075	1420	1950	900

*Values without safety margin

Reference BTO 100% - RTO 55% | ETO 75% | BTC 75% | RTC 55% | ETC 80%

CERTIFICATION	CONSTRUCTION STANDARDS	TEST STANDARDS
CE Certification acc. to PED 2014/68/EU Fire Safe Design acc. to API 607Ed.6/ISO 10497 ATEX II 2GD acc. to 2014/34/EU Fugitive Emissions Class B acc. to ISO 15848 CO1 (-46°C to RT) Quality System Certified acc. to ISO 9001	ISO 17292 DIN EN 1092-1 EN 558-1 ISO 5211	Pressure tests according to: EN12266-1 / API 598 / ISO 5208 Rate D Tests applied: Hydrostatic Shell Test Hydrostatic Seat Test Pneumatic Tightness Test Pneumatic Seat Test EN 10204 type 3.1 Certificate

Standards acc. to the latest available revision

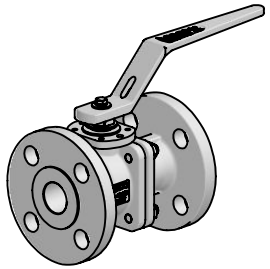
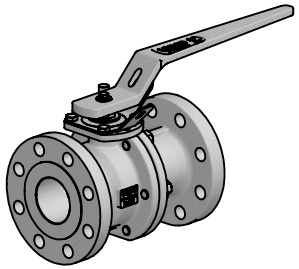
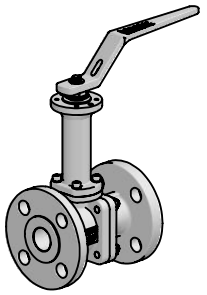
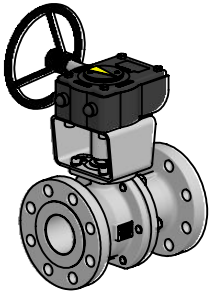

SERIE	CLASS	VERSION	PORT	DN	ENDS	BODY	BALL | STEM	BOLTING	SEATS | 1° SEAL	PACKING | 2° SEAL | O'RING	OPTIONS
CFM-A	1 - PN16	6 - DIN	F - FB	015	FLANGED RF	A - 1.0619	E - A351 CF8M + TCC | A564 S17400	A - Gr. 8.8	1 - A479 316/L + TCC | Graphite	1 - Graphite | Graphite | FKM	C - Spring Return
	2 - PN40			020	F2 - DIN F4 / F5	B - 1.6220	Z - Others	F - A4 CL.70	9 - Others		E - Extension 100 mm
				025	F3 - DIN F1	F - 1.4408					F - Bracket Automation
				032		Z - Others					G - Gear Box
				040							H - Actuators
				050							I - Switch Box / Limit Swiches
				065							L - Locking Lever/Handle
				080							O - Oval Lever/Handle
				100							R - Bare Shaft / Bare Stem
											S - Solenoid Valve
											Y - Full Execution SS.316
											Z - Others

Example:

CFM-A26F015F2F2AEA11

CFM-A16F080F3F3FEF11H

METALLIC SEATS RANGE

METALLIC SEATS RANGE
CFM / BFM / XFM / SFM / VTM / CTM



INDUSTRIAL RANGE

XF Series
3 pieces bolted - Floating
Cl 150 to 800
⅜” (DN10) to 6” (DN150)



SF Series
3 pieces bolted - Floating
Cl 300 to 800
⅜” (DN10) to 4” (DN100)



BF Series
2 split body - Floating
Cl 150 to 600
½” (DN15) to 4” (DN100)



HF Series
3 pieces bolted - Floating
Cl 1500/2500
⅜” (DN10) to 2” (DN50)



QF Series
Multi-ways - Floating
Cl 150 to 600
½” (DN15) to 2” (DN50)



VTR Series
3 pieces bolted - Trunnion
Cl 150 to 2500
½” (DN15) to 12” (DN300)



OTHER RANGE

SANITARY RANGE
XP / RP / LP / MP / QP



CRYOGENIC RANGE
CCF / CXF / CBF / CSF / CVT

