METAL SEATED BALL VALVES

Technical Datasheet

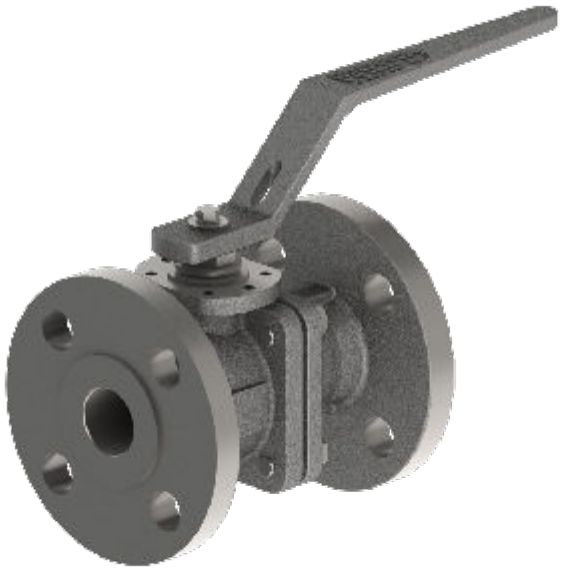



CFM-A Series
Abrasive Media
FB ½" (DN15) to 4" (DN100)
CL150 / CL300
-100 °C to 250 °C

CFM-A SERIES

CL150/CL300 (300/750 psi)
FULL BORE - ½" (DN15) ÷ 2" (DN50)
STANDARD ASME
BILL OF MATERIALS

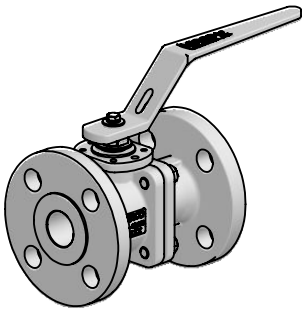

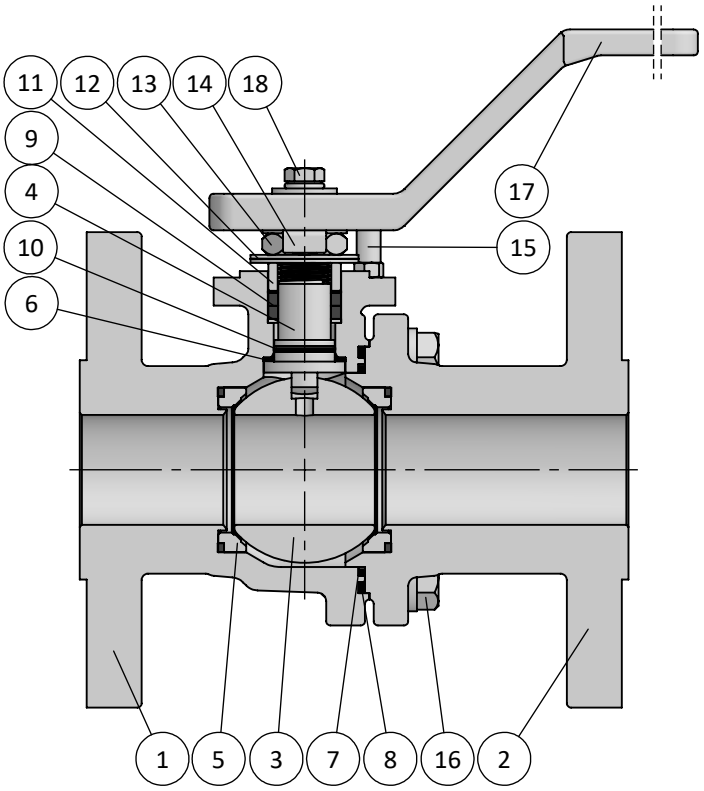

BILL OF MATERIALS

Part	Qt.	Description		CARBON STEEL VERSION	LT CARBON STEEL VERSION	STAINLESS STEEL VERSION
1	1	Body		A216 WCB	A352 LCC	A351 CF8M
2	1	End		A216 WCB	A352 LCC	A351 CF8M
3	1	Ball		A351 CF8M + TCC		
4	1	Stem		A564 S17400		
5	2	Seat		A479 316/L + TCC + GRAPHITE		
6	1	Stem Thrust Seals	↘	C-RPTFE + PEEK		
7	1	1st Body Seal	↘	C-RPTFE		
8	1	2nd Body Seal	↘	GRAPHITE		
9	1	Stem Packing Set	↘	GRAPHITE		
10	1	O'Ring		FKM		
11	1	Gland Packing		STAINLESS ST. 316		
12	2	Disc Spring		STAINLESS ST. 316		
13	1	Stem Nut		STAINLESS ST. 316		
14	1	Locking Clip		STAINLESS ST. 316		
15	1	Stop Indicator		STAINLESS ST. 316		
16	-	Bolt		A193 Gr. B7 ZINC.	A320 Gr. L7M ZINC.	A193 Gr. B8M cl.2
17	1	Handle		A351 CF8		
18	1	Handle Fastener		STAINLESS ST. 316		

↘ TYPICAL SPARE PARTS

CFM-A SERIES

CL150/CL300 (300/750 psi)
FULL BORE - ½" (DN15) ÷ 2" (DN50)
ASME FLANGED ENDS
OVERALL DIMENSIONS

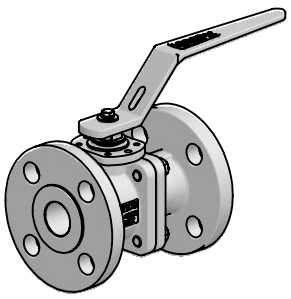

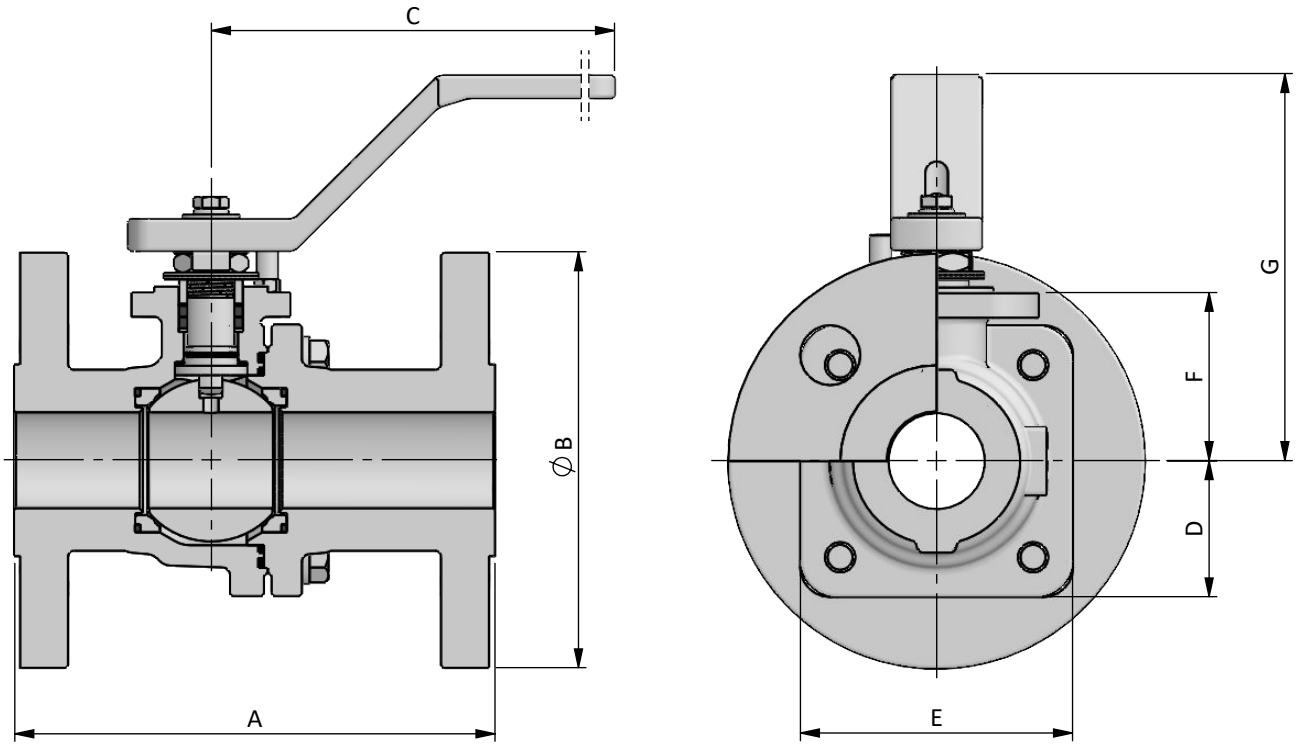

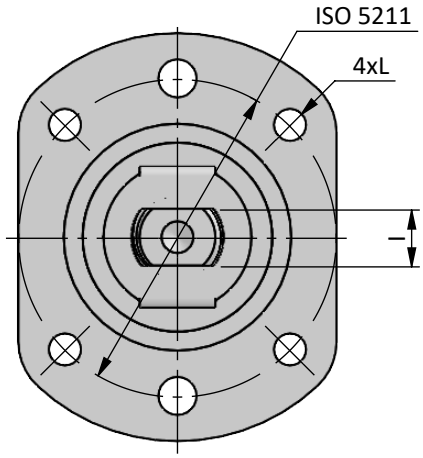

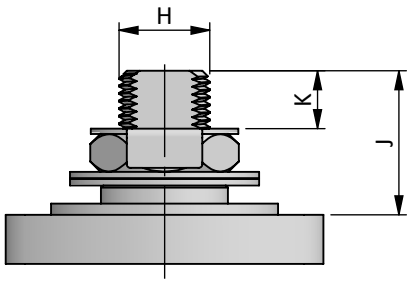

DN / Size		Dimensions										Automation					Weight Approx. [kg]	
FULL BORE		Ball Port	CL150		CL300		C	D	E	F	G	H	I	J	K	L	ISO 5211	
mm	inch		A	B	A	B												CL150	CL300
15	½''	15.1	108	90	140	95	180	27.5	55	35	90	10	6	15	5.5	M5	F04	2	2
20	¾''	20.6	117	100	152	115	180	32.5	65	40	100	12	7.5	20	8	M5	F04	2.5	3.5
25	1''	25.4	127	110	165	125	180	37.5	75	45	105	12	7.5	20	8	M5	F04	3.5	5
40	1½''	38.1	165	125	190	155	210	47.5	95	60	125	16	11	22	8.5	M6	F05	6	9
50*	2"	49.0	178	150	216	165	300	65	Ø145	80	150	20	14	26	9	M8	F07	10	15

*Valve construction is similar to DN65 ÷ DN100 (page 4-5)

CFM-A SERIES

CL150/CL300 (300/750 psi)
FULL BORE - 2½" (DN65) ÷ 4" (DN100)
STANDARD ASME
BILL OF MATERIALS

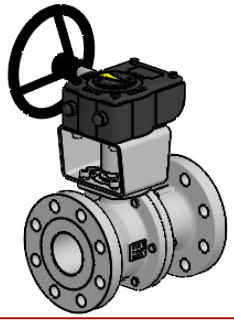

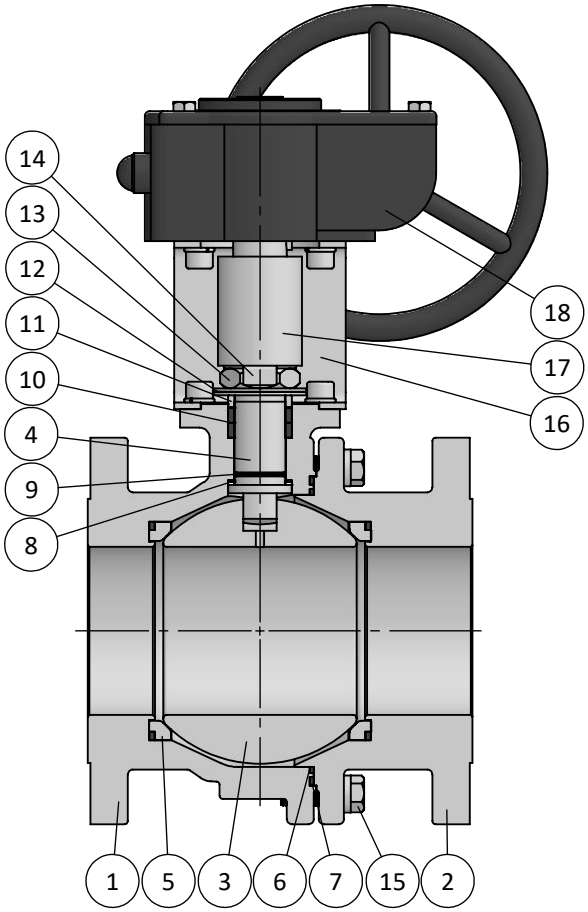

BILL OF MATERIALS

Part	Qt.	Description		CARBON STEEL VERSION	LT CARBON STEEL VERSION	STAINLESS STEEL VERSION
1	1	Body		A216 WCB	A352 LCC	A351 CF8M
2	1	End		A216 WCB	A352 LCC	A351 CF8M
3	1	Ball		A351 CF8M + TCC		
4	1	Stem		A564 S17400		
5	2	Seat	↘	A479 316/L + TCC + GRAPHITE		
6	1	1st Body Seal	↘	C-RPTFE		
7	1	2nd Body Seal	↘	GRAPHITE		
8	1	Stem Thrust Seals	↘	C-RPTFE + PEEK		
9	1	O'Ring	↘	FKM		
10	1	Stem Packing Set	↘	GRAPHITE		
11	1	Gland Packing		STAINLESS ST. 316		
12	2	Disc Spring		STAINLESS ST. 316		
13	1	Stem Nut		STAINLESS ST. 316		
14	1	Locking Clip		STAINLESS ST. 316		
15	-	Bolt		A193 Gr. B7 ZINC.	A320 Gr. L7M ZINC.	A193 Gr. B8M cl.2
16	1	Bracket		STAINLESS ST. 304		
17	1	Bracket Stem		A564 S17400		
18	1	Gear Box		CAST IRON		

↘ TYPICAL SPARE PARTS

CFM-A SERIES

CL150/CL300 (300/750 psi)
FULL BORE - 2½" (DN65) ÷ 4" (DN100)
ASME FLANGED ENDS
OVERALL DIMENSIONS

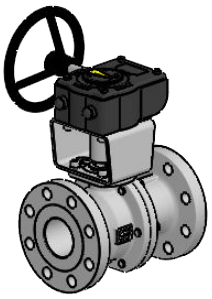

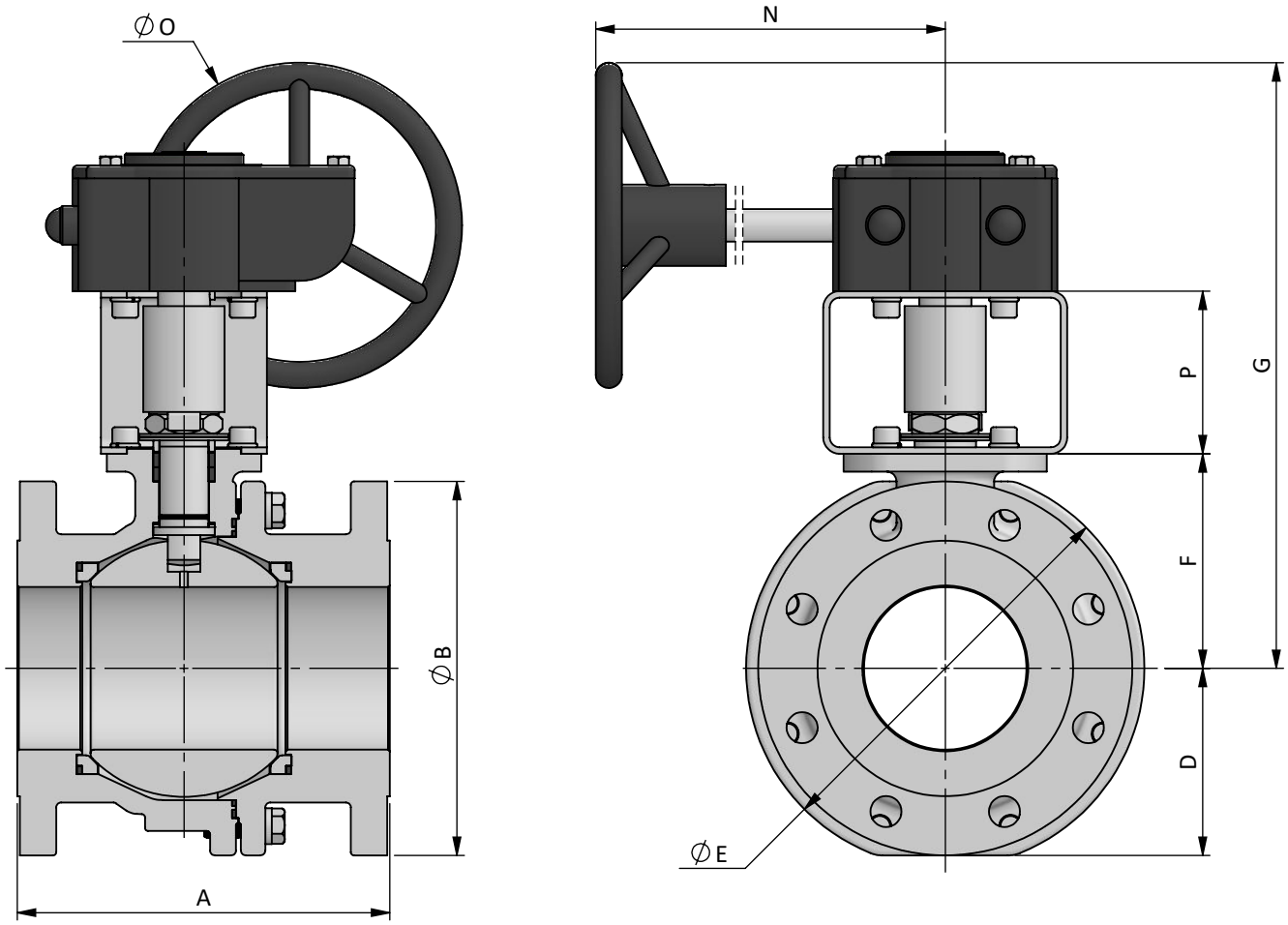

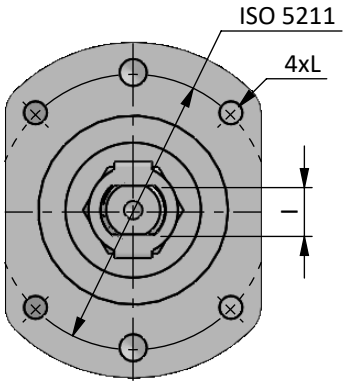

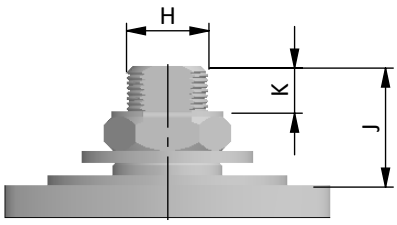

DN / Size		Dimensions									Automation									Weight Approx. [kg]	
FULL BORE		Ball Port	CL150		CL300		D	E	F	G	H	I	J	K	L	N	O	P	ISO 5211		
mm	inch		A	B	A	B														CL150	CL300
65	2½''	62	190	180	241	190	80	175	95	280	24	18	35	14.5	M8	220	200	60	F07	25	30
80	3''	75	203	190	282	210	90	200	105	335	24	18	35	12	M10	220	300	100	F10	30	35
100	4''	100	229	230	305	255	115	250	135	425	30	22	42.5	16.5	M10	285	300	100	F10	50	65

CFM-A SERIES

CL150/CL300 (300/750 psi)
FULL BORE - ½'' (DN15) ÷ 4" (DN100)
LOCKING DEVICE

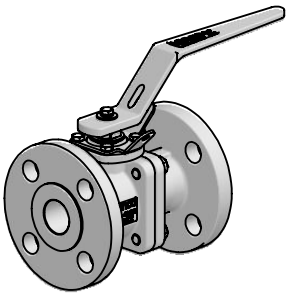

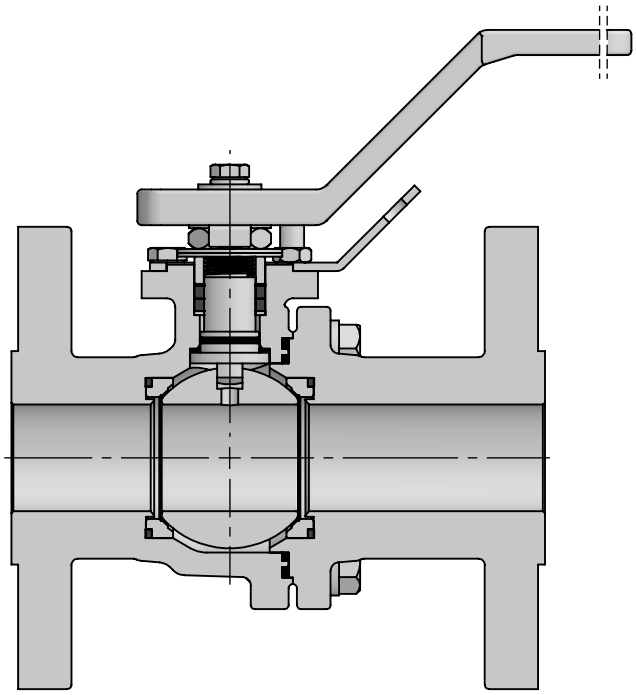

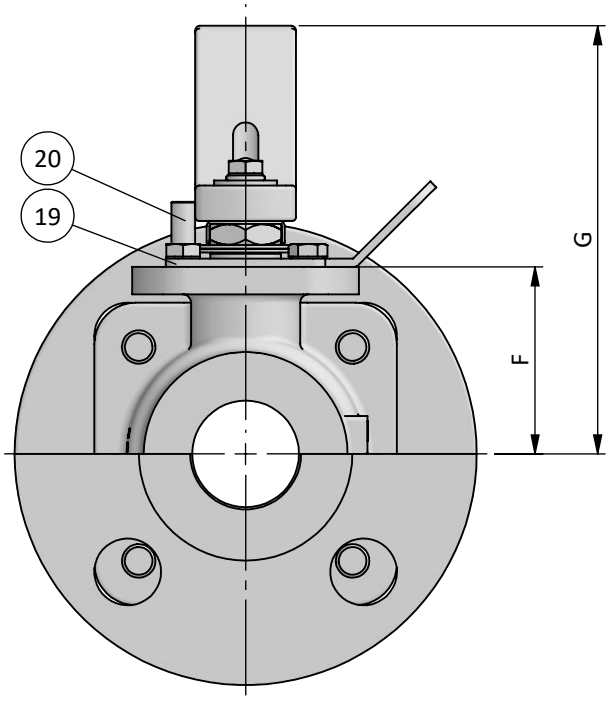

BILL OF MATERIALS			
Part	**Qt.**	**Description**	**Material**
19	1	Locking Plate	STAINLESS ST. 304
20	1	Stop Pin	STAINLESS ST. 316

DN / Size		**Dimensions**	
FULL BORE		**F**	**G**
mm	**inch**		
15	½''	35	90
20	¾''	40	100
25	1''	45	105
40	1½''	60	125
50	2"	80	150
65	2½''	GEARBOX	
80	3"		
100	4"		

Larger size valves available with lockable gearboxes

CFM-A SERIES

CL150/CL300 (300/750 psi)
FULL BORE - ½'' (DN15) ÷ 4" (DN100)
BRACKET FOR AUTOMATION

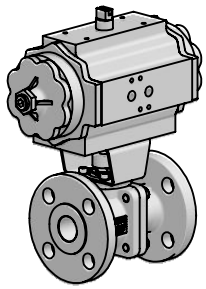

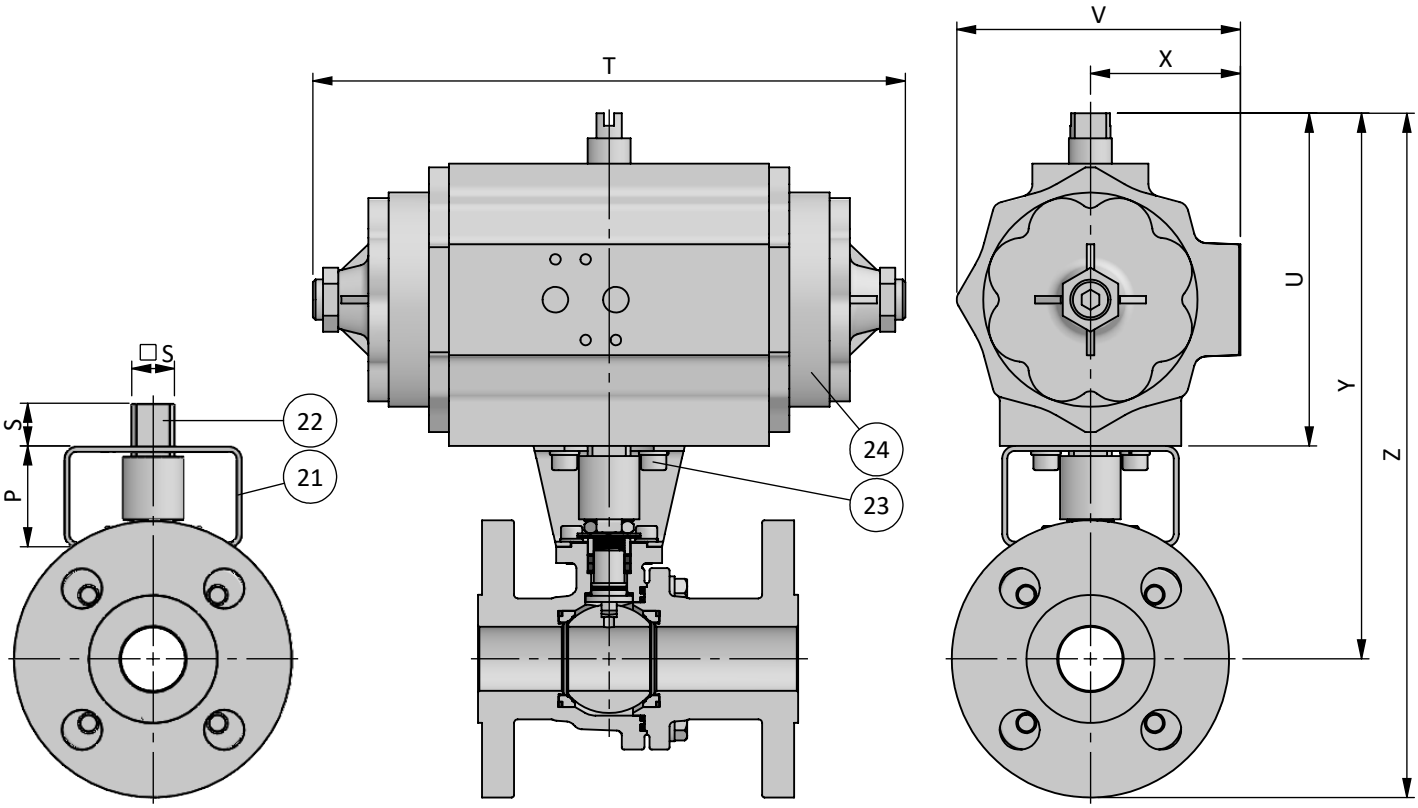

BILL OF MATERIALS

Part	Qt.	Description	Material
21	1	Bracket	STAINLESS ST. 304
22	1	Coupling	A564 S17400
23	8	Bolt	STAINLESS ST. 316
24	1	Pneumatic Actuator	ALUMINIUM

DN / Size		Automation		Actuator*														
FULL BORE		P	S	ISO 5211	CL150							ISO 5211	CL300						
mm	inch				REF.	T	U	V	X	Y	Z		REF.	T	U	V	X	Y	Z
15	½"	40	17	F05	008-10	233	131	112	57	210	250	F05	008-10	233	131	112	57	210	255
20	¾"	40	19	F05	012-08	280	131	112	57	215	265	F05	012-08	280	131	112	57	215	270
25	1"	40	19/22	F05	012-08	280	131	112	57	215	275	F07	020-14	294	151	133	70	235	300
40	1½"	50	22/27	F07	030-18	286	189	169	85	300	360	F07	040-18	344	199	169	85	310	385
50	2"	60	27	F07	040-18	344	199	169	85	340	415	F07	060-20	377	230	195	100	370	450
65	2½"	60	27	F07	060-20	377	230	195	100	385	475	F07	060-20	377	230	195	100	385	480
80	3"	100	36	F10	140-24	445	272	232	120	480	575	F10	140-24	445	272	232	120	480	585
100	4"	100	46	F14	200-20	537	272	232	120	505	620	F14	200-20	537	272	232	120	505	635

*Spring Return Pneumatic Actuators selected for CCC seats considering input air pressure of 5.5bar and minimum 25% safety margin

CFM-A SERIES

CL150/CL300 (300/750 psi)
FULL BORE - ½'' (DN15) ÷ 4" (DN100)
EXTENDED STEM

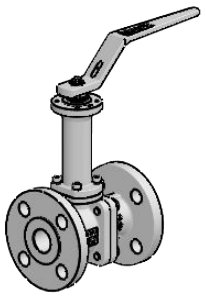

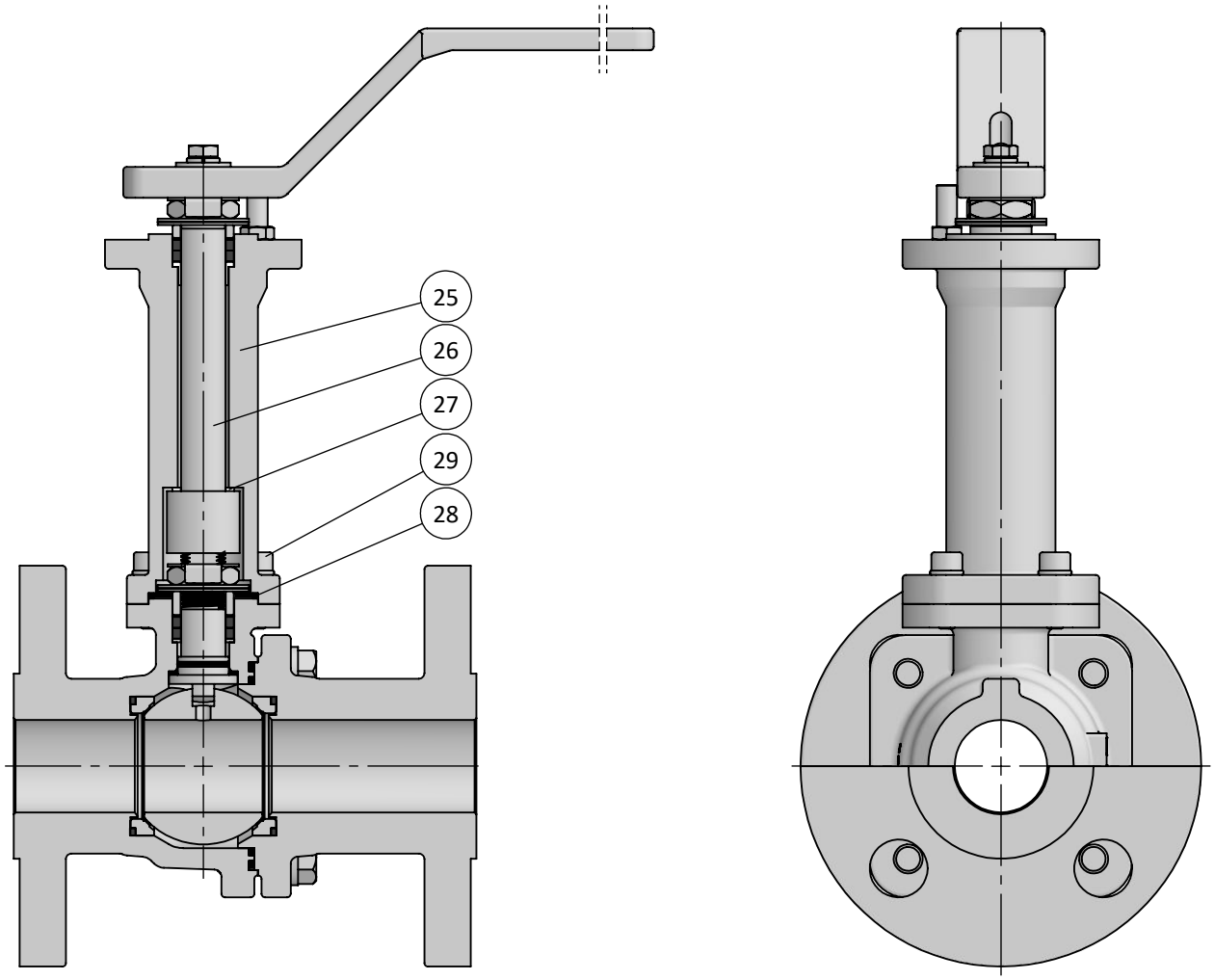

BILL OF MATERIALS

Part	Qt.	Description		Material
25	1	Extension		A351 CF8M
26	1	Stem Extension		A564 S17400
27	1	Bearing	↘	TFM1600
28	1	Extension Seal	↘	GRAPHITE
29	4	Bolt		STAINLESS ST. 316

CFM-A SERIES

CL150/CL300 (300/750 psi)
FULL BORE - DN 15 (½'') ÷ 100 (4")
TECHNICAL SPECIFICATIONS

Pressure - Temperature Rating

A216 WCB — A352 LCC — A351 CF8M — TCC

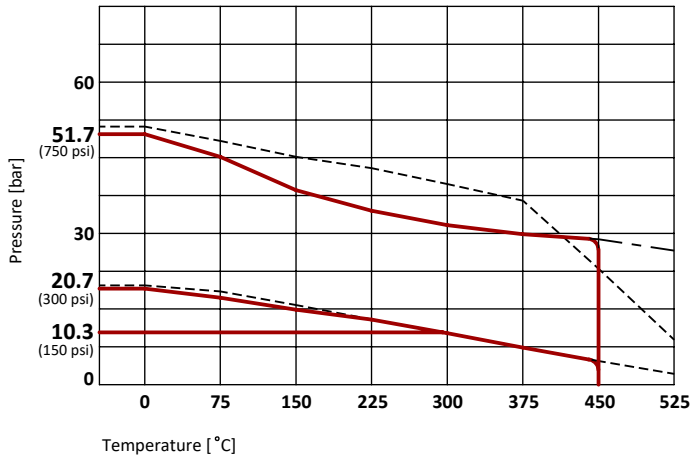

Working Conditions					
Material	mOT* [°C]				MOT* [°C]
	WCB	LCC	CF8M		ALL
TCC	-29	-46	-50	-100*	250

*mOT - minimum Operating Temperature.
*MOT - Maximum Operating Temperature at 10 bar
Standard version recommended down to -50°C
*Extended version recommended down to -100°C

TCC - Tungsten Carbide Coating

Tungsten Carbide Coating applied in the contact surfaces of the ball and seats, with a minimum specified thickness of 200 µm, increases the hardness (up to 70 HRC) and the resistance to wearing conditions (abrasion, friction, others). This technology combined with a lapping process improves the sealing effect and the operation lifetime expectancy without maintenance under severe working conditions.

DN	Rating	
	CL150	CL300
FB 15 (½") to 50 (2")	20.7 bar / 300 psi	51.7 bar / 750 psi
FB 65 (2½") to 80 (3")	20.7 bar / 300 psi	
FB 100 (4")	10.3 bar / 150 psi	

DN / Size		Torque Valve Figure [Nm] *				Maximum Allowable Stem Torque [Nm]				Flow Coefficient Cv
FULL BORE		CL150		CL300						
mm	inch	Rating [bar]	BTO	Rating [bar]	BTO	MAST				
		TCC				S31803	S32760	S17400	718	
15	½''	20.7	18	51.7	20	25	30	40	53.5	15
20	¾''	20.7	25	51.7	30	45	55	71.5	98.5	35
25	1''	20.7	30	51.7	50	45	55	71.5	98.5	50
40	1½''	20.7	65	51.7	100	125	150	200	275	115
50	2"	20.7	100	51.7	150	240	290	385	535	200
65	2½''	20.7	150	20.7	150	445	540	715	1000	325
80	3"	20.7	250	20.7	250	445	540	715	1000	490
100	4"	10.3	350	10.3	350	880	1075	1420	1950	900

*Values without safety margin

Reference BTO 100% - RTO 55% | ETO 75% | BTC 75% | RTC 55% | ETC 80%

CERTIFICATION	CONSTRUCTION STANDARDS	TEST STANDARDS
CE Certification acc. to PED 2014/68/EU Fire Safe Design acc. to API 607Ed.6/ISO 10497 ATEX II 2GD acc. to 2014/34/EU Fugitive Emissions Class B acc. to ISO 15848 CO1 (-46°C to RT) Quality System Certified acc. to ISO 9001	ASME B16.34 ASME B16.5 ASME B16.10 ISO 5211	Pressure tests according to: EN12266-1 / API 598 / ISO 5208 Rate D Tests applied: Hydrostatic Shell Test Hydrostatic Seat Test Pneumatic Tightness Test Pneumatic Seat Test EN 10204 type 3.1 Certificate

Standards acc. to the latest available revision

VINCO VALVES

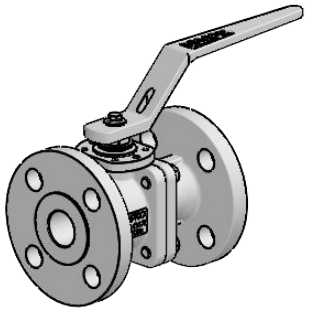
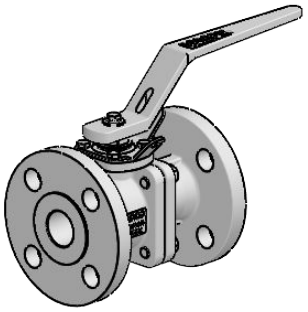
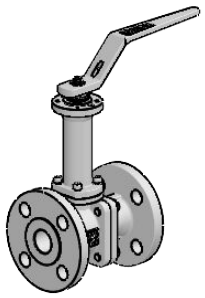
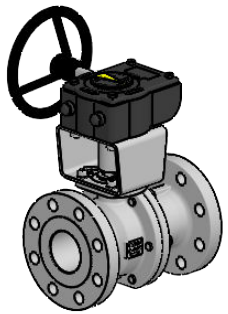

SERIE	CLASS	VERSION	PORT	DN	ENDS	BODY	BALL | STEM	BOLTING	SEATS | 1° SEAL	PACKING | 2° SEAL | O'RING	OPTIONS
CFM-A	1 - CL150	1 - ASME	F - FB	015	FLANGED RF	A - A216 WCB	E - A351 CF8M + TCC | A564 S17400	A - B7	1 - A479 316/L + TCC | Graphite	1 - Graphite | Graphite | FKM	C - Spring Return
	2 - CL300			020	F1 - ASME RF	B - A352 LCC	Z - Others	D - L7M	9 - Others		E - Extension 100 mm
				025		F - A351 CF8M		F - B8M cl.2			F - Bracket Automation
				040		Z - Others					G - Gear Box
				050							H - Actuators
				065							I - Switch Box / Limit Swiches
				080							L - Locking Lever/Handle
				100							O - Oval Lever/Handle
											R - Bare Shaft / Bare Stem
											S - Solenoid Valve
											Y - Full Execution SS.316
											Z - Others

Example:

CFM-A21F015F1F1AEA11

CFM-A11F080F1F1FEF11H

METALLIC SEATS RANGE

METALLIC SEATS RANGE
CFM / BFM / XFM / SFM / VTM / CTM



INDUSTRIAL RANGE

XF Series
3 pieces bolted - Floating
Cl 150 to 600
DN ⅜” (10) to 6” (150)



SF Series
3 pieces bolted - Floating
Cl 300 to 800
DN ⅜” (10) to 4” (100)



BF Series
2 split body - Floating
Cl 150 to 600
DN ½” (15) to 4” (100)



HF Series
3 pieces bolted - Floating
Cl 1500/2500
DN ⅜” (10) to 2” (50)



QF Series
Multi-ways - Floating
Cl 150 to 600
DN ½” (15) to 2” (50)



VTR Series
3 pieces bolted - Trunnion
Cl 150 to 2500
DN ½” (15) to 12” (300)



OTHER RANGE

SANITARY RANGE
XP / RP / LP / MP / QP



CRYOGENIC RANGE
CCF / CXF / CBF / CSF / CVT

