SANITARY BALL VALVES
ADDITIONAL OPTIONS AND EXTRAS

STEM EXTENSION UNITS

SEF/H – Stem extension where the overall height readily clears common insulation thickness.The installation of the The stem extension unit is tight against the ball valve body to avoid fluid leakage. The stem extension unit allows ISO 5211 mounting.
The lever handle parts from the valve should be reassembled on the extension unit when retrofitting.

SEF/P – Stem extension with the same features as the SEF/H unit plus an additional packing set which serves as a safety feature in case of leakage through the ball valve stem seals.
The stem extension also features two sensing ports to provide a means of leakage detection.

SEF/A – Direct mounting assembly unit with barstock body and enclosed stem coupling. Compact and cleaner than typical ISO 5211 brackets and couplings which tend to accumulate dust and impurities.
This mounting adapter serves dual purpose as a mounting adapter for actuators and a stem extension.



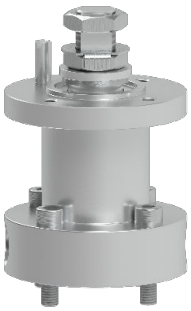

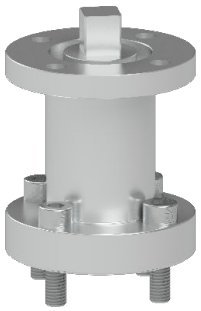



SEF/H



SEF/P



SEF/A

We reserve the right to change the design and material of this product without notice.

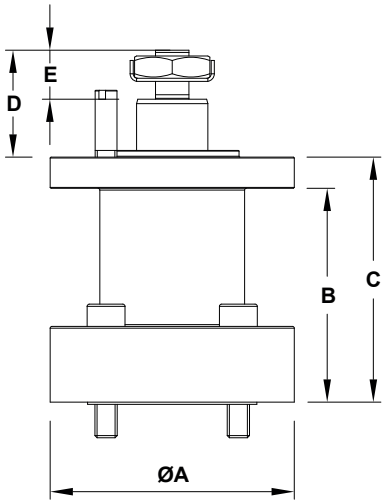

SEF/H

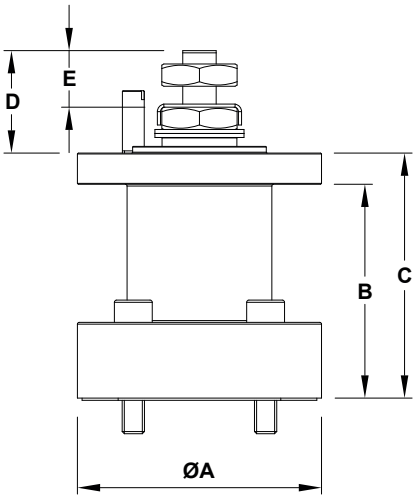

SEF/P

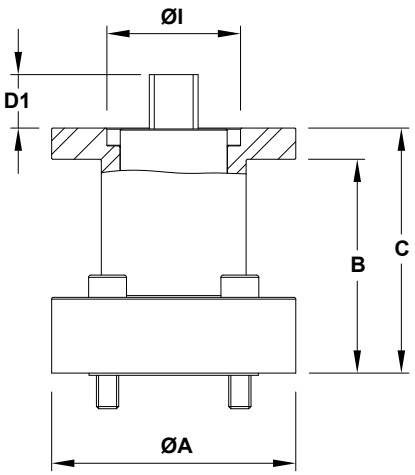

SEF/A

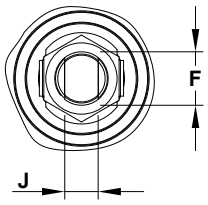

SEF/H and SEF/P
(same dimensions as top of valve)

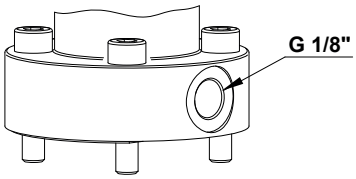

Leakage detection sensing points

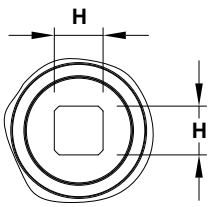

SEF/A

DIMENSIONS (mm)														
MODEL	**ISO 5211 ***	**SIZE**		**ØA**	**B**	**C**	**D**	**D1**	**E**	**F**	**H**	**J**	**ØI**	**WGT. (kg)**
		BPE	**DIN / ISO**											
SEF/...3	F03 *	1/2"	DN 10	46	44	50	16	10	8	6	9	M10 x 1	25	0,4
SEF/...3	F03 *	3/4"	DN 15	46	44	50	16	10	8	6	9	M10 x 1	25	0,4
SEF/...4	F04	1"	DN 20	55	48	55	24	12	11	7,5	11	M12 x 1,25	30	0,6
SEF/...4	F04	-	DN 25	55	48	55	24	12	11	7,5	11	M12 x 1,25	30	0,6
SEF/...5	F05	11/2"	DN 32	65	57	65	27	16	15	11	14	M16 x 1,5	35	0,9
SEF/...5	F05	2"	DN 40	65	57	65	27	16	15	11	14	M16 x 1,5	35	0,9
SEF/...5	F05	-	DN 50	65	57	65	27	16	15	11	14	M16 x 1,5	35	0,9
SEF/...7	F7	21/2"	DN 65	90	64	75	44	19	25	18	17	M24 x 2	55	2,2
SEF/...7	F7	3"	DN 80	90	64	75	44	19	25	18	17	M24 x 2	55	2,2
SEF/...10	F10	4"	DN 100	OR	OR	OR	44	24	16,5	18	22	M24 x 2	70	OR
SEF/...14	F14	6"	DN 150	OR	OR	OR	79	38	45	30	36	M39 x 2	100	OR

* Flange adapter is required (M3HP models only).
OR – On request.

We reserve the right to change the design and material of this product without notice.

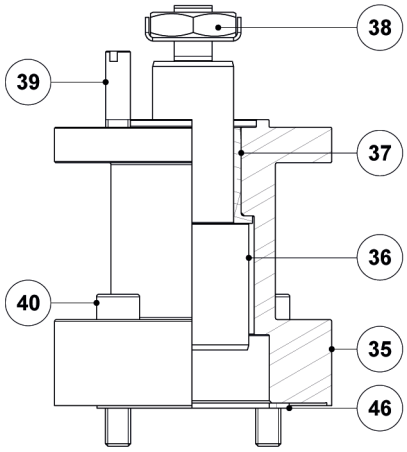

SEF/H

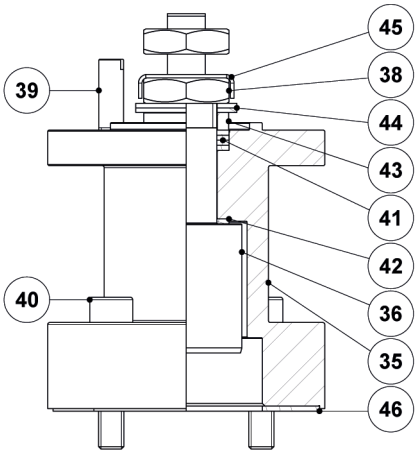

SEF/P

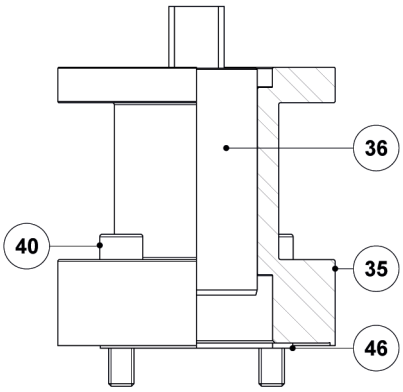

SEF/A

MATERIALS		
POS. Nº	**DESIGNATION**	**MATERIAL**
35	Body	AISI 304 / 1.4401
36	Stem	AISI 304 / 1.4401
37	Plain bearing	PTFE
38	Compression nut	AISI 304 / 1.4301
39	Stop pin	AISI 304 / 1.4301
40	Fixing bolt	AISI 304 / 1.4301
41	* Stem seal	TFM 1600
42	Stem thrust seal	TFM 1600
43	Spacer	AISI 316 / 1.4401
44	* Spring washer	AISI 304 / 1.4401
45	Lock washer	AISI 304 / 1.4401
46	* Gasket	PTFE

* Available spare parts.

We reserve the right to change the design and material of this product without notice.

ISO 5211 MOUNTING DIMENSIONS – M3HP

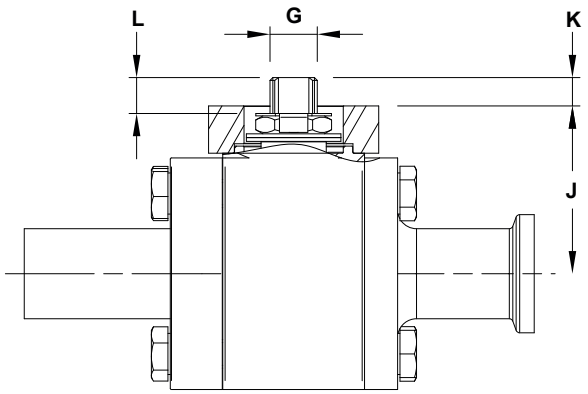

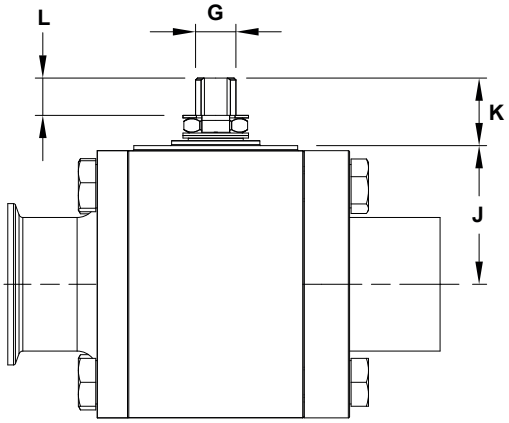

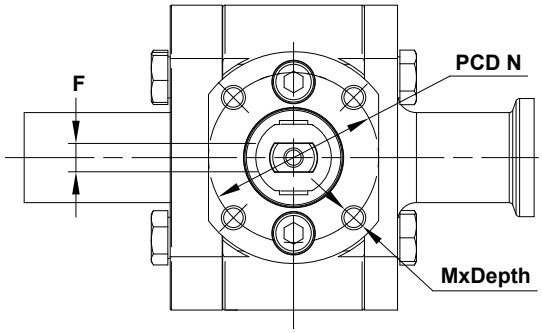

1/2" and 3/4" – DN 10 and DN 15

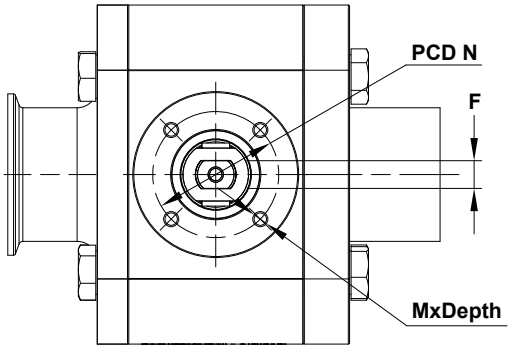

1" to 6" – DN 20 to DN 150

DIMENSIONS (mm)								
SIZE		J	K	L	F	G	M x Depth	N
BPE	DIN / ISO							
1/2"	DN 10	32	5,5	7,5	6	M10 x 1	M5 x 10	PCD Ø36 (F03) *
3/4"	DN 15	35,5	6	7,5	6	M10 x 1	M5 x 10	PCD Ø36 (F03) *
1"	DN 20	32	24	13	7,5	M12 x 1,25	M5 x 8	PCD Ø42 (F04)
-	DN 25	37	24	13	7,5	M12 x 1,25	M5 x 8	PCD Ø42 (F04)
11/2"	DN 32	45	27	15	11	M16 x 1,5	M6 x 12	PCD Ø50 (F05)
-	DN 40	49	27	15	11	M16 x 1,5	M6 x 12	PCD Ø50 (F05)
2"	DN 50	55	27	15	11	M16 x 1,5	M6 x 12	PCD Ø50 (F05)
21/2"	DN 65	72,5	44	25	18	M24 x 2	M8 x 15	PCD Ø70 (F07)
3"	DN 80	83,5	44	25	18	M24 x 2	M8 x 15	PCD Ø70 (F07)
4"	DN 100	101,5	44	25	18	M24 x 2	M10 x 18	PCD Ø102 (F10)
6"	DN 150	166	79	45	30	M39 x 2	M16 x 22	PCD Ø140 (F14)

* Dimensions include flange adapter.

We reserve the right to change the design and material of this product without notice.

ISO 5211 MOUNTING DIMENSIONS – M3H

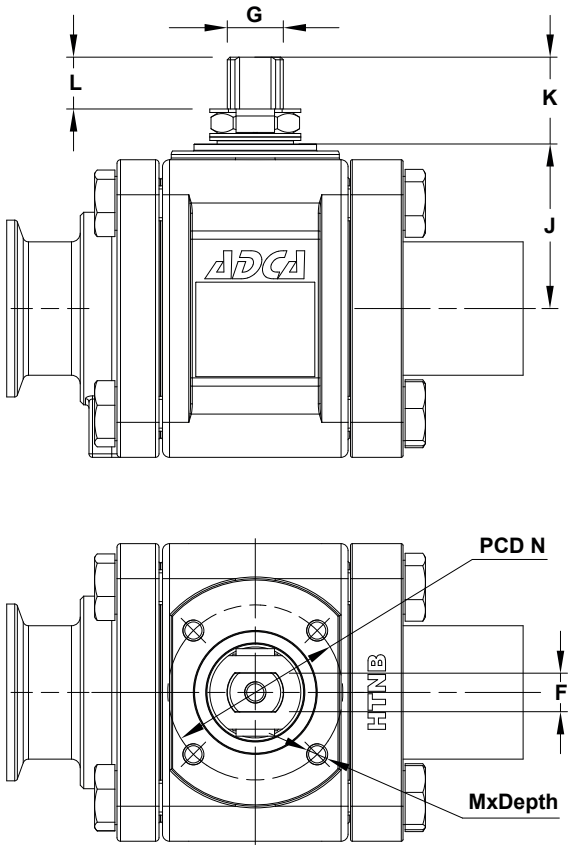

DIMENSIONS (mm)								
SIZE		J	K	L	F	G	M x Depth	N
BPE	DIN / ISO							
1/2"	DN 10	27,5	10	7	6	M10 x 1	M5 x 5	PCD Ø36 (F03) *
3/4"	DN 15	30,5	11	7,5	6	M10 x 1	M5 x 5	PCD Ø36 (F03) *
1"	DN 20	38	18	14	7,5	M12 x 1,25	M5 x 10	PCD Ø42 (F04)
-	DN 25	37	24	13	7,5	M12 x 1,25	M5 x 10	PCD Ø42 (F04)
11/2"	DN 32	45	27	15	11	M16 x 1,5	M6 x 12	PCD Ø50 (F05)
-	DN 40	50	27	15	11	M16 x 1,5	M6 x 12	PCD Ø50 (F05)
2"	DN 50	55	27	15	11	M16 x 1,5	M6 x 12	PCD Ø50 (F05)
21/2"	DN 65	74,5	41	25	18	M24 x 2	M8 x 13	PCD Ø70 (F07)
3"	DN 80	86	41	25	18	M24 x 2	M8 x 13	PCD Ø70 (F07)
4"	DN 100	104	42	25	18	M24 x 2	M10 x 18	PCD Ø102 (F10)
6"	DN 150	166	79	45	30	M39 x 2	M16 x 22	PCD Ø140 (F14)

We reserve the right to change the design and material of this product without notice.

STEM TORQUE

STEM TORQUE VALUES			
SIZE		BREAKAWAY TORQUE * (Nm)	MAXIMUM ALLOWABLE STEM TORQUE – MAST ** (Nm)
ASME	DIN / ISO		
1/2"	DN 10	4	17
3/4"	DN 15	4	17
1"	DN 20	10	44
-	DN 35	16	44
11/2"	DN 32	23	95
-	DN 40	28	95
2"	DN 50	35	95
21/2"	DN 65	48	250
3"	DN 80	75	250
4"	DN 100	120	250
6"	DN 150	180	495

* Torque values for valves with PTFE or TFM standard seals at full differential pressure. The indicated torques are for valves operated frequently. Greater torques can be required for valves subject to long static periods. Safety margins not included in these figures. Values may vary depending on the working conditions.

** Torque values are related to valves with stem manufactured in AISI 316L/1.4404. In case of valves manufactured from other materials (executed under special request) please consult.

SPRING RETURN HANDLES

Spring return handles, also called “dead man’s handles” consist of an enclosed spring-loaded lever mechanism which ensures fail-safe operation when mounted in a quarter-turn valve.
This device ensures that the valve cannot be left open (or closed) as a powerful spring will place the valve in the fail-safe position as soon as the operator releases the handle.



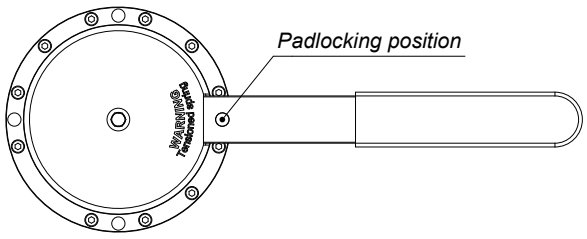

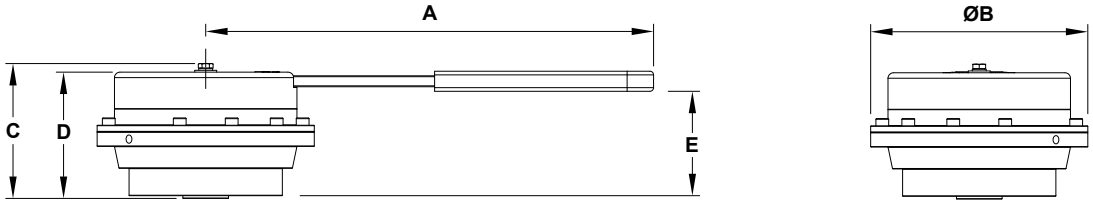

DIMENSIONS (mm)							
MODEL	A	ØB	C	D	E	MOUNTING TYPES	TORQUE (Nm)
SRH1/24	245	119	74	69	57	F03 / F05 / F07	24
SRH1/40	245	199	74	69	57	F03 / F05 / F07	40

We reserve the right to change the design and material of this product without notice.

GEARBOXES

Gearboxes are quarter-turn devices intended for the operation of ball valves, among others. The handwheels are designed for smooth and easy operation.



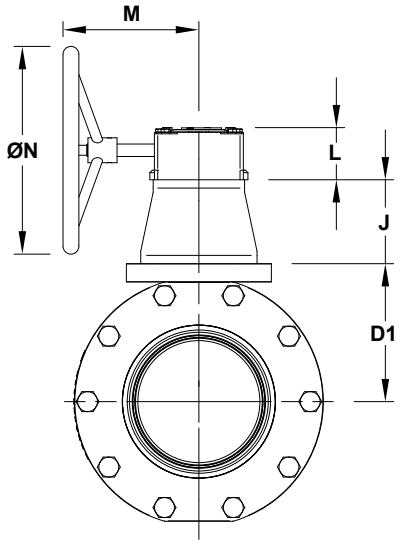

DIMENSIONS (mm)							
SIZE		D1	J	L	M	ØN	WEIGHT (kg)
ASME	DIN / ISO						
21/2"	DN 65	75	60	57	144	125	34,1
3"	DN 80	86	60	57	144	125	48,0
4"	DN 100	104	80	57	144	125	77,6
6"	DN 150	166	101	67	164	250	101,0

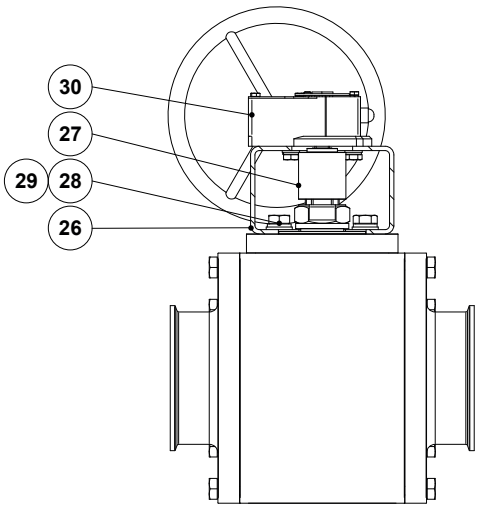

MATERIALS		
POS. Nº	DESIGNATION	MATERIAL
26	Bracket	AISI 304 / 1.4301
27	Coupling stem	AISI 304 / 1.4301
28	Bolt	Stainless steel A2
29	Washer	Stainless steel A2
30	Gearbox	* Cast iron

* Others on request.

We reserve the right to change the design and material of this product without notice.

VALVES WITH CONDENSATE DRAIN CONNECTION



Valves with condensate drain connection feature an additional port which allows drainage of steam condensate or trapped liquids from the valve body cavity. Valves with this option are also used to allow sampling of steam for purity checks or to serve as isolation means for safe maintenance of steam traps.
In addition to these features, the flow of steam surrounding the valve ensures complete sterilisation of the valve body cavity.

HOW IT WORKS

Open position – The valve allows steam flow to the process. The steam trap is isolated from the flow to allow sterilization temperatures to be quickly reached.
Drain position – Condensate flows inside the valve body cavity and is discharged by an automatic steam trap connected to the bottom connection, preventing backup of liquid. Flow to the process, or sampling, is isolated.
Service position – Allows steam trap maintenance to be performed safely without the need of a second isolating valve, since in this position the valve is fully closed.

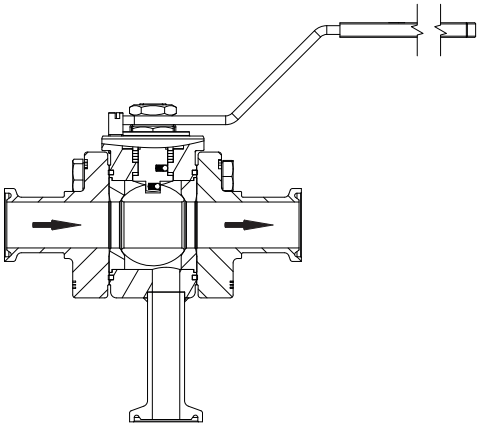

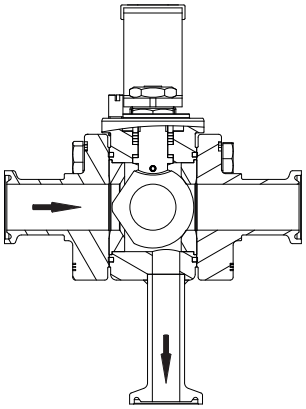

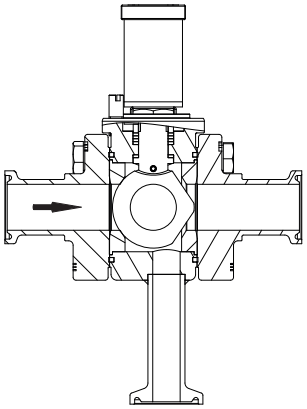

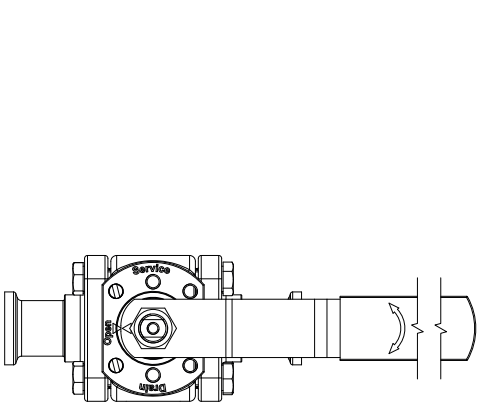

Open position

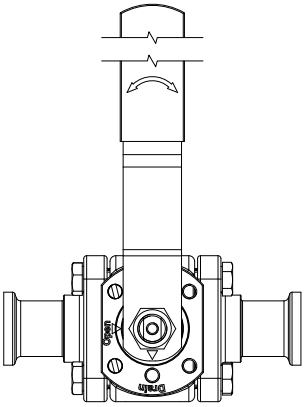

Drain position

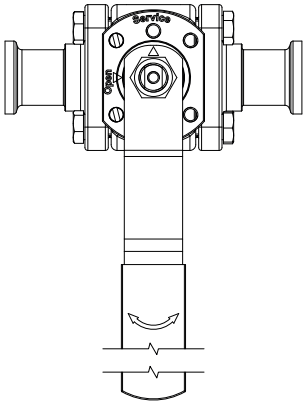

Service position

We reserve the right to change the design and material of this product without notice.