LINEAR ELECTRIC ACTUATORS
AVF234S and AVM234S

DESCRIPTION



The AVM234S / AVF234S valve actuators offer automatic adaptation to the stroke of the valve, precision activation and high energy efficiency with minimal operating noise.
Ideal for use with any DSH series direct steam injection humidifier and in TDS (Total Dissolved Solids) control systems VCP blowdown valves.
In case of power failure/interruption, the AVF234S actuator runs, spring driven, into its respective fail-safe position (thrust rod extended). In modulating duty, the end position seating is made via limit switches.

MAIN FEATURES

IP 66 protection.
Automatic detection of control signal with LED indications.
Adjustable characteristic curve (linear, quadratic and equal-percentage) and running time via DIP switch.
Automatic adaptation to valve stroke.
Manual operation with disengagement of the actuator motor.
Mechanical stroke indication.
Spring-return feature (AVF234S).
Switching input (2-point or 3-point-step control) or analog input (0...10 V or 4...20 mA).

OPTIONS AND ACCESSORIES:	Split-range unit for adjusting sequences. 230 V AC and 100 V AC power supply modules. Auxiliary change over contacts. Potentiometers, e.g. for 3-point-step in closed loop. Adapters for high temperature conditions.
USE:	Actuation of V series ADCATrol control valves, or others on request.
AVAILABLE MODELS:	AVM234S. AVF234S - Fail-safe with spring-return.

TECHNICAL DATA

ACTUATOR MODEL	AVM234S	AVF234S
Power supply	230 V 50/60 Hz / 110 V 50/60 Hz / 24 V 50/60 Hz / 24 V DC	
Power consumption a)	10 W (20 VA) for 24 V 50/60 Hz and 24 V DC; 13 W (28 VA) for 230 V 50/60 Hz	
Running time of motor mm/min (mm/s)	10 (0,17), 15 (0,25), 30 (0,50)	
Running time of spring b)	-	15…30 s
Actuating power	2,5 kN	2 kN
Response time for 3-point-step	200 ms	
Number of spring returns	-	>40,000
Actuator stroke	0…49 mm	0…40 mm
Housing material	Fire-retardant plastic	

a) Choose transformer for this value, otherwise malfunctions may occur.
b) Return time equates to stroke of 14...40 mm and does not depend on set running time.

POSITIONER	
Control signal 1	0...10 V, Ri=100 kΩ
Control signal 2	4...20 mA, Ri=50 Ω
Positional feedback 0-10V	0...10 V; load > 2,5 kΩ
Starting point U0	0 V or 10 V
Control span ΔU	10 V
Switching range Xsh	300 mV

AMBIENT CONDITIONS	
Admissible ambient temperature	-10…55 ºC
Admissible ambient humidity	< 95% rh, no condensation
Temperature of medium c)	Max. 130 ºC (180 ºC or 200 ºC with accessories)

c) Adaptor needed for higher temperatures (180 ºC or 200 ºC) (see accessories and options).

STANDARDS AND DIRECTIVES	
Type of protection	IP66 (EN 60529)
Protection class	III (IEC 60730)
EMC Directive 2014/30/EU d)	EN 61000-6-2, EN 61000-6-4
Low-voltage directive 2014/35/EU	EN 60730-1, EN 60730-2-14
Over-voltage categories	III
Degree of contamination	III

d) EN 61000-6-2: HF immunity, limitation of feedback signal between 80 MHz and 1000 MHz criterion B, otherwise criterion A.

OPTIONS AND ACCESSORIES

OPTIONS AND ACCESSORIES	TYPE
Split-range unit for adjusting sequences, fitted in separate junction box	313529 001
Module for 2-point/3-point and analogue activation; additional power 2 VA; 230 V AC ± 15% supply voltage	372332 001
Module for 2-point/3-point and analogue activation; additional power 2 VA; 100 V AC ± 15% supply voltage	372332 002
Aux. change-over contacts 12...250 V ac; Infinitely variable, min. 100 mA and 12 V permissible load 6(2) **a)**	372333 001
Aux. change-over contacts 12...250 V ac; Gold plated, from 1 mA, to max. 30 V, wider range 3(1) **a)**	372333 002
Potentiometer 2 kΩ 1 W 24 V	372334 001
Potentiometer 130 Ω 1 W 24 V	372334 002
Potentiometer 1 kΩ 1 W 24 V	372334 006
Adapter required when the temperature of the medium is 130…180 °C	372336 180
Adapter required when the temperature of the medium is 180…240 °C	372336 240

a) Two contacts each.

ELECTRICAL CONNECTIONS

BASIC WIRING DIAGRAMS

AVM234S

ANALOG 0...10 V / 4...20 mA INPUT

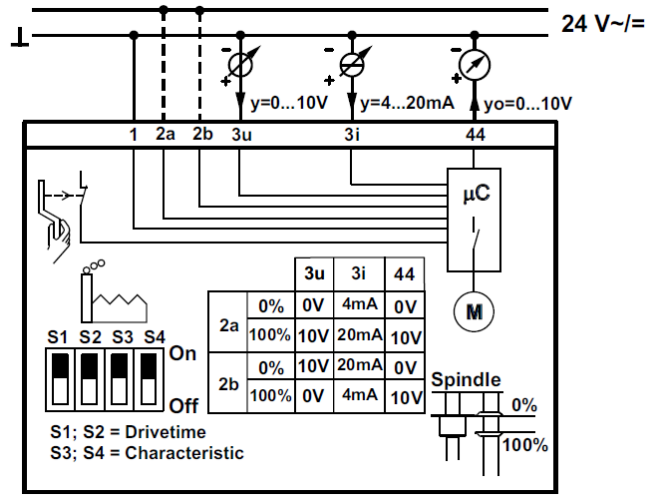

2-POINT / 3-POINT STEP SWITCHING INPUT

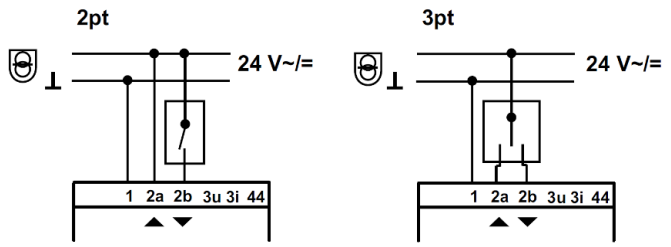

AVF234S

ANALOG 0...10 V / 4...20 mA INPUT

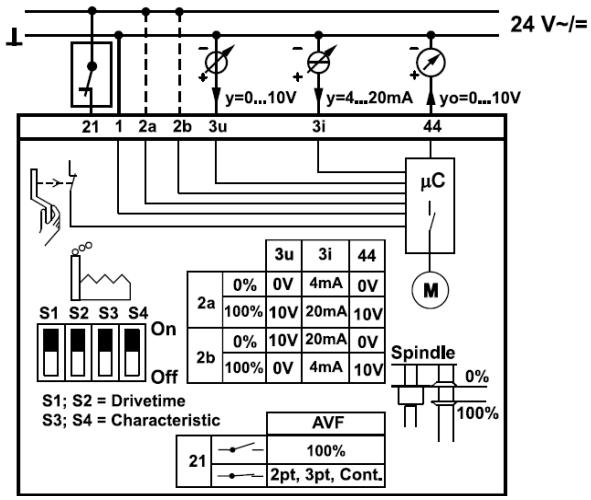

2-POINT / 3-POINT STEP SWITCHING INPUT

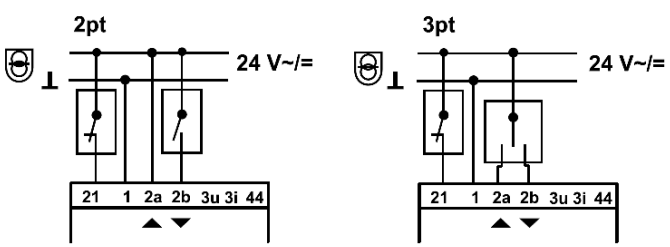

OPTIONS AND ACCESSORIES WIRING DIAGRAMS

AVM234S

AVF234S

ANALOG 0...10 V / 4...20 mA INPUT a)

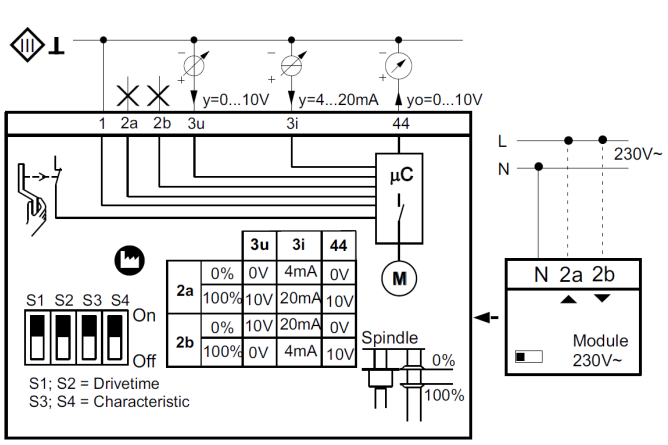

		3u	3i	44
2a	0%	0V	4mA	0V
	100%	10V	20mA	10V
2b	0%	10V	20mA	0V
	100%	0V	4mA	10V

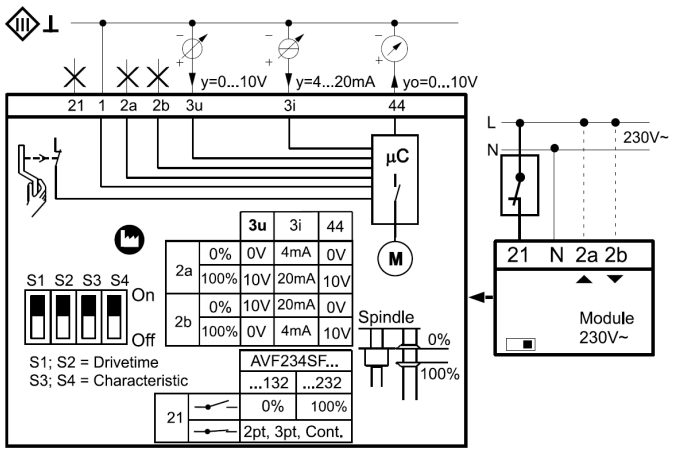

		3u	3i	44
2a	0%	0V	4mA	0V
	100%	10V	20mA	10V
2b	0%	10V	20mA	0V
	100%	0V	4mA	10V

2-POINT / 3-POINT STEP SWITCHING INPUT WITH 230 V AC POWER SUPPLY a)

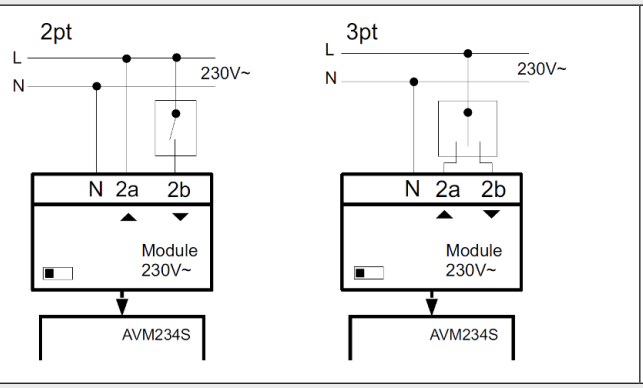

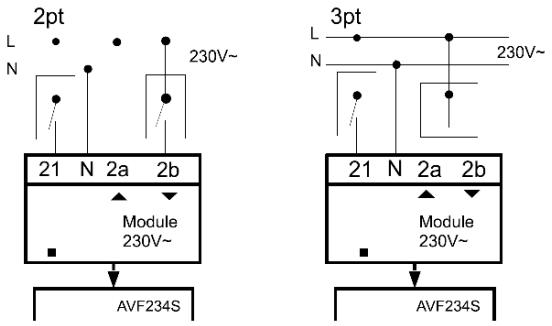

AUXILIARY CONTACTS AND POTENTIOMETERS b)

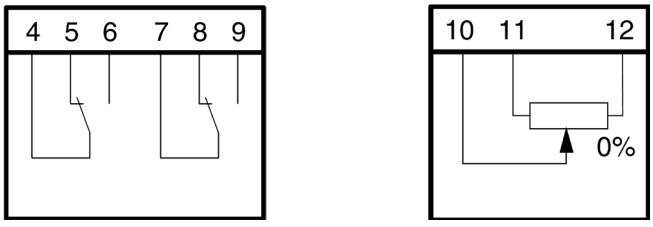

HIGH TEMPERATURE ADAPTERS c)

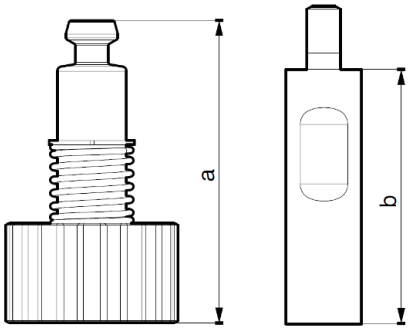

TYPE	T (°C)	a (mm)	b (mm)
372336 180	180	69.4	60
372336 240	200	109.4	100

OPTIONS AND ACCESSORIES WIRING DIAGRAMS

AVM234S	AVF234S

SPLIT RANGE UNIT d)

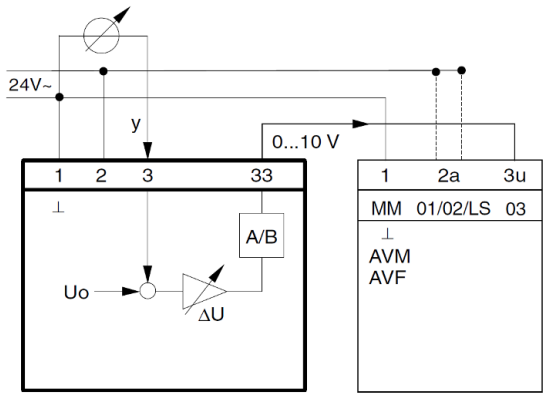

a) Using accessory type 372332 001. Same connections apply for the 100 V AC modules (type 372332 002).
b) Accessories type 372333 001, 372333 002, 372334 001, 372334 002 and 372334 006.
c) Accessories type 372336 180 and 372336 240.
d) Accessory type 313529 001.

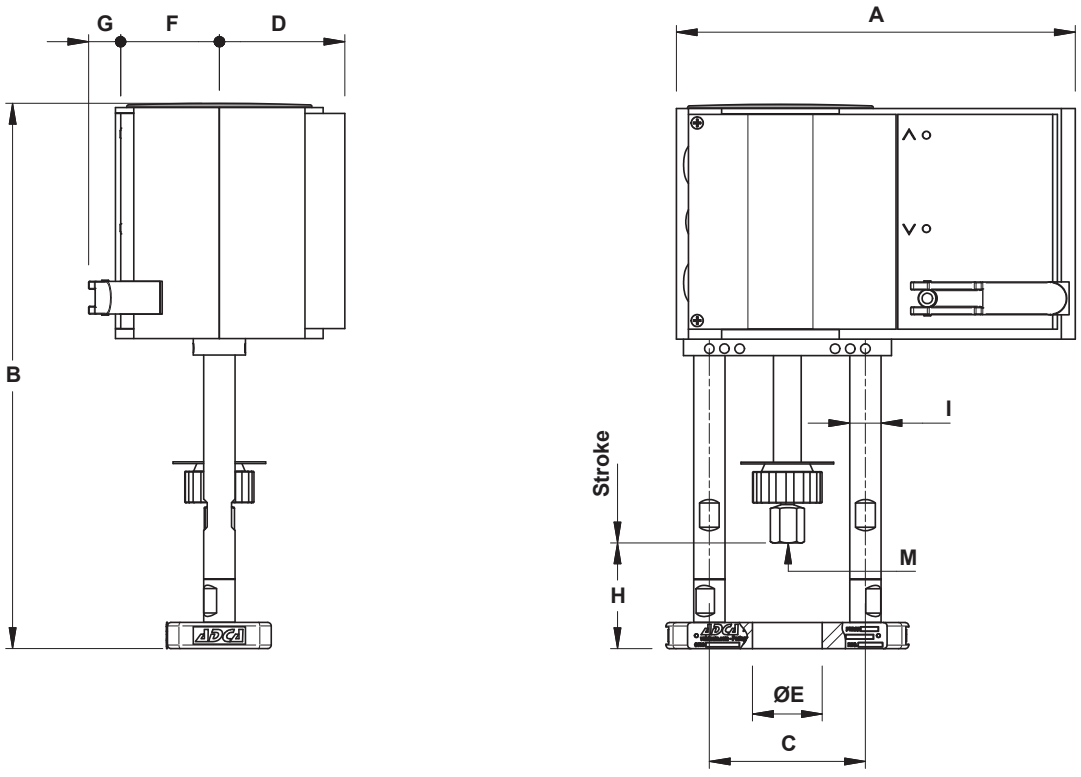

DIMENSIONS (mm)

MODEL	A	B	C	D	Ø E	F	G	H	I	M	WEIGHT (kg)
AVM234S AVF234S	230	314	90	72	40	57	18	37	18	M10	4,1

TYPE OF CHARACTERISTIC CURVES

Desired character. curve	Switch coding	Characteristic curve for valve	Characteristic curve for drive	Effective on valve
Equal percentage	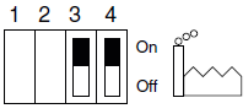	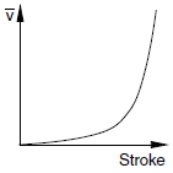	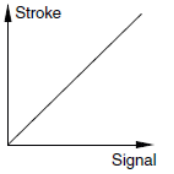	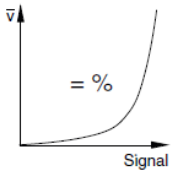
Quadratic	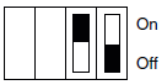	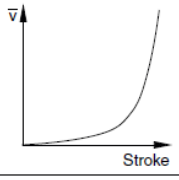	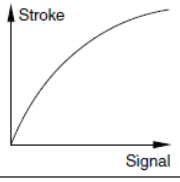	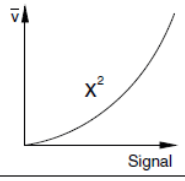
Linear	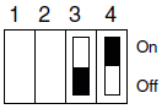	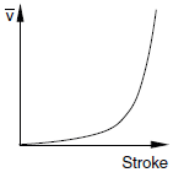	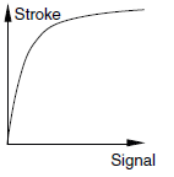	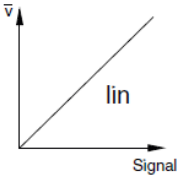
Equal percentage		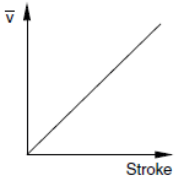	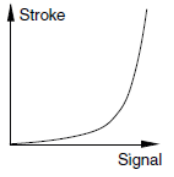	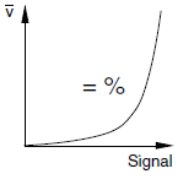
Linear	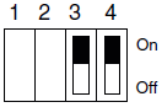	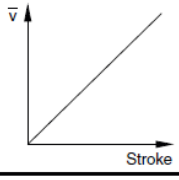	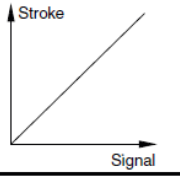	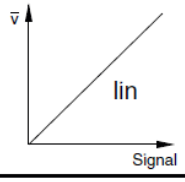
 = factory setting				

MOTOR RUNNING TIME SELECTION GUIDE

Run time per mm	Switch coding	Run time for 14 mm stroke	Run time for 20 mm stroke	Run time for 40 mm stroke
2s		28s ± 1	40s ± 1	80s ± 4
4s	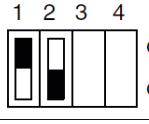	56s ± 2	80s ± 4	160s ± 4
6s	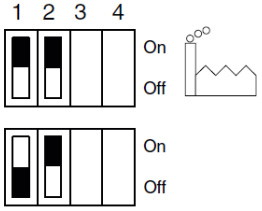	84s ± 4	120s ± 4	240s ± 8
 = factory setting				

We reserve the right to change the design and material of this product without notice.