INDUSTRIAL BALL VALVES

Technical Datasheet

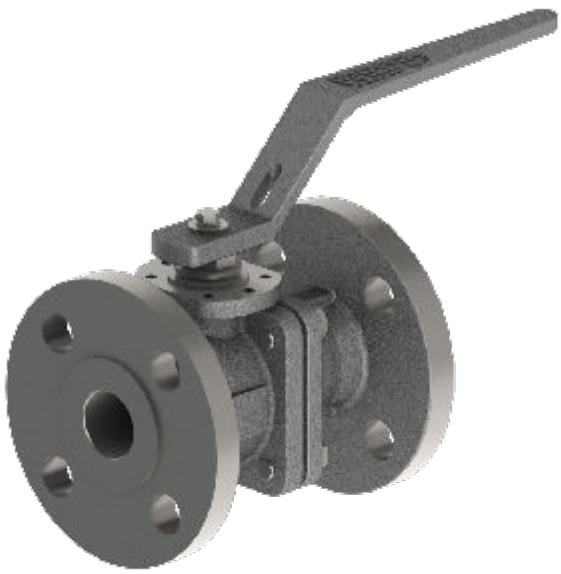

CF Series

FB DN15 (½") to DN200 (8")
PN16 / PN40
-100 °C to 280 °C

DS.IND.CF.DIN.CAST.R05

CF SERIES

PN40

FULL BORE - DN15 (½") ÷ DN40 (1½")

STANDARD DIN

BILL OF MATERIALS

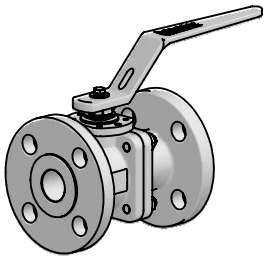

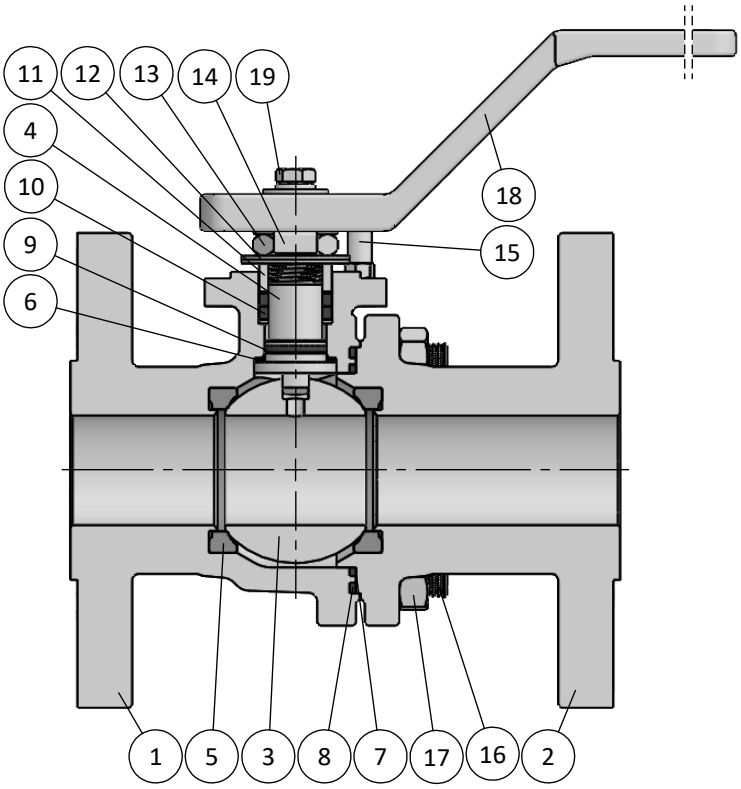

BILL OF MATERIALS					
Part	**Qt.**	**Description**	**CARBON STEEL VERSION**	**LT CARBON STEEL VERSION**	**STAINLESS STEEL VERSION**
1	1	Body	1.0619	1.6220	1.4408
2	1	End	1.0619	1.6220	1.4408
3	1	Ball	A351 CF8M		
4	1	Stem	A479 316/L		
5	2	Seat ↘	C-RPTFE		
6	1	Stem Thrust Seals ↘	C-RPTFE + PEEK		
7	1	1st Body Seal ↘	C-RPTFE		
8	1	2nd Body Seal ↘	GRAPHITE		
9	1	O'Ring ↘	FKM		
10	1	Stem Packing Set ↘	GRAPHITE + PEEK		
11	1	Gland Packing	STAINLESS ST. 316		
12	2	Disc Spring	STAINLESS ST. 316		
13	1	Stem Nut	STAINLESS ST. 316		
14	1	Locking Clip	STAINLESS ST. 316		
15	1	Stop Pin	STAINLESS ST. 316		
16	-	Stud	Gr.8.8 Zinc.	A4 CL.70	
17	-	Nut	Gr. 8 Zinc.	A4 CL.70	
18	1	Handle	A351 CF8		
19	1	Handle Fastener	STAINLESS ST. 304		

↘ TYPICAL SPARE PARTS

CF SERIES

PN40

FULL BORE - DN15 (½") ÷ DN40 (1½")

DIN FLANGED ENDS

OVERALL DIMENSIONS

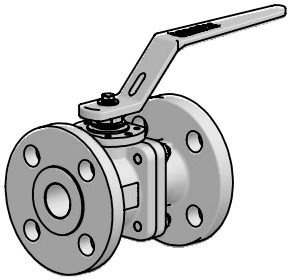

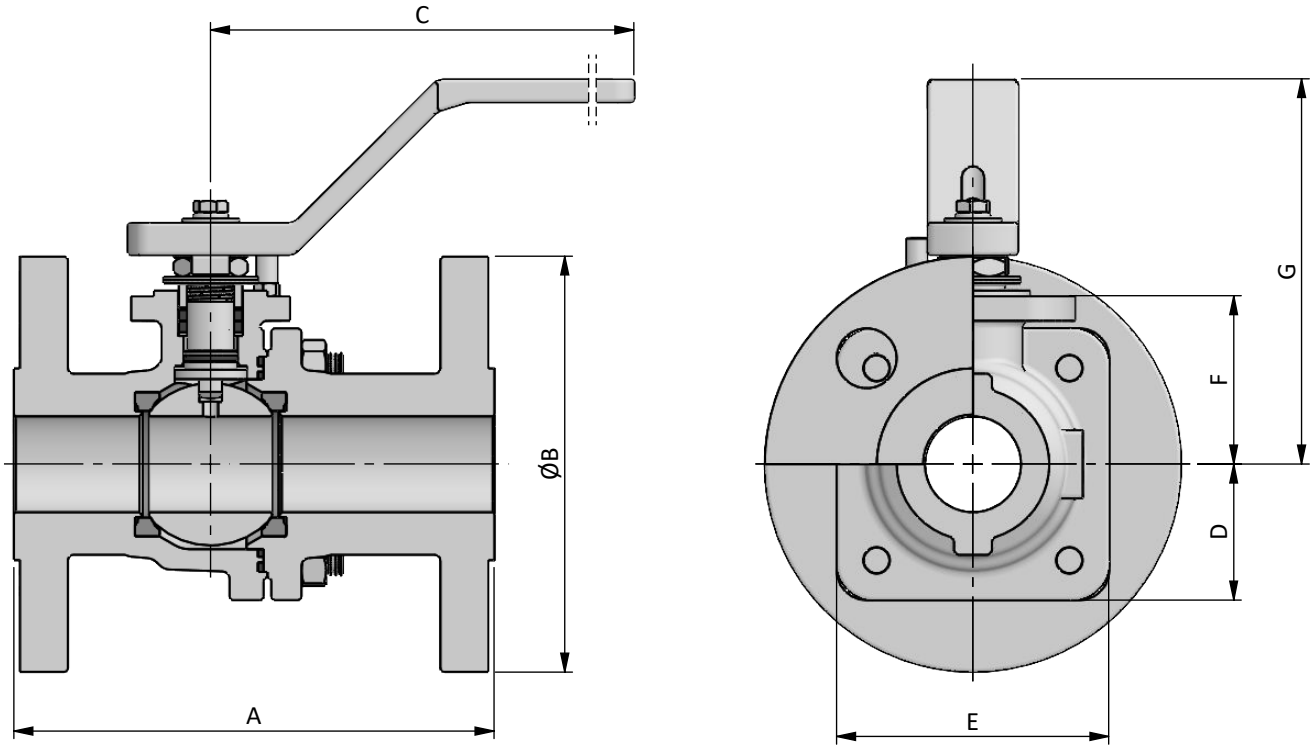

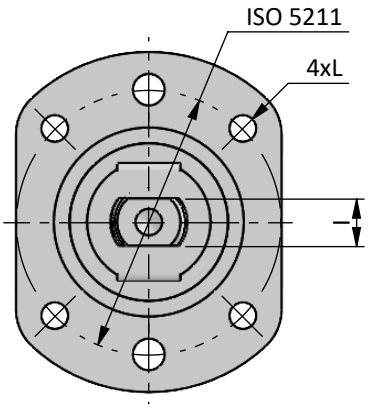

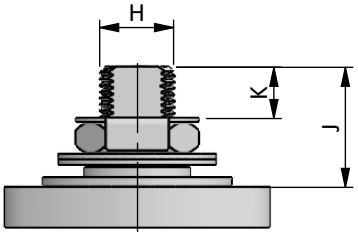

DN / Size		Dimensions										Automation						Weight Approx. [kg]	
FULL BORE		Ball Port	PN40				C	D	E	F	G	H	I	J	K	L	ISO 5211		
			F1		F4														
mm	inch		A	B	A	B												F1	F4
15	½''	15.1	130	95	115	95	180	27.5	55	35	90	10	6	15	5.5	M5	F04	3	2.5
20	¾''	20.6	150	105	120	105	180	32.5	65	40	100	12	7.5	20	8	M5	F04	4	3.5
25	1''	25.4	160	115	125	115	180	37.5	75	45	105	12	7.5	20	8	M5	F04	4.5	4
32	1¼''	31.8	180	140	130	140	210	42.5	85	55	125	16	11	22	8.5	M6	F05	6.5	6
40	1½''	38.1	200	150	140	150	210	47.5	95	60	130	16	11	22	8.5	M6	F05	8.5	7.5

CF SERIES

PN16/PN40

FULL BORE - DN50 (2") ÷ DN100 (4")

STANDARD DIN

BILL OF MATERIALS

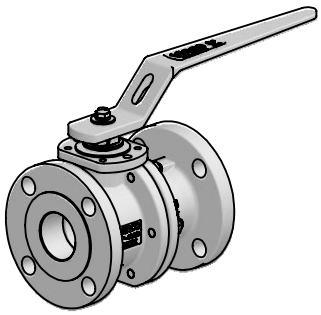

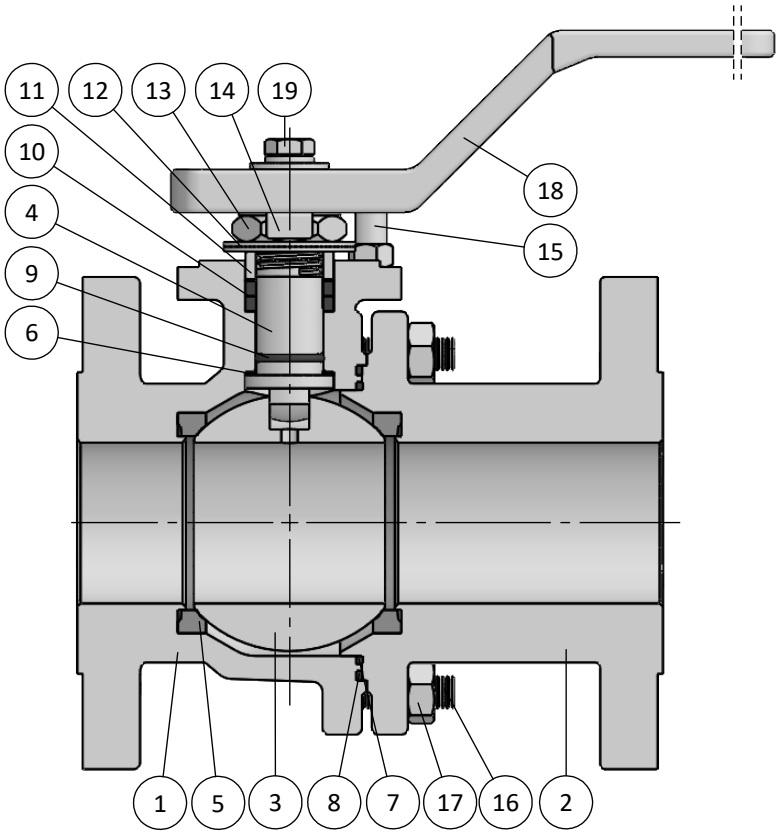

BILL OF MATERIALS

Part	Qt.	Description		CARBON STEEL VERSION	LT CARBON STEEL VERSION	STAINLESS STEEL VERSION
1	1	Body		1.0619	1.6220	1.4408
2	1	End		1.0619	1.6220	1.4408
3	1	Ball		A351 CF8M		
4	1	Stem		A479 316/L		
5	2	Seat	↘	C-RPTFE		
6	1	Stem Thrust Seals	↘	C-RPTFE + PEEK		
7	1	1st Body Seal	↘	C-RPTFE		
8	1	2nd Body Seal	↘	GRAPHITE		
9	1	O'Ring	↘	FKM		
10	1	Stem Packing Set	↘	GRAPHITE + PEEK		
11	1	Gland Packing		STAINLESS ST. 316		
12	2	Disc Spring		STAINLESS ST. 316		
13	1	Stem Nut		STAINLESS ST. 316		
14	1	Locking Clip		STAINLESS ST. 316		
15	1	Stop Pin		STAINLESS ST. 316		
16	-	Stud		Gr.8.8 Zinc.	A4 CL.70	
17	-	Nut		Gr. 8 Zinc.	A4 CL.70	
18	1	Handle		A351 CF8		
19	1	Handle Fastener		STAINLESS ST. 304		

↘ TYPICAL SPARE PARTS

CF SERIES

PN16/PN40

FULL BORE - DN50 (2") ÷ DN100 (4")

DIN FLANGED ENDS

OVERALL DIMENSIONS

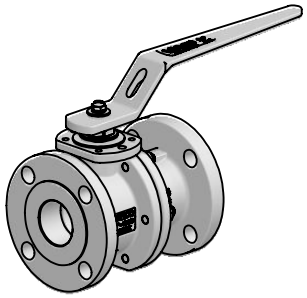

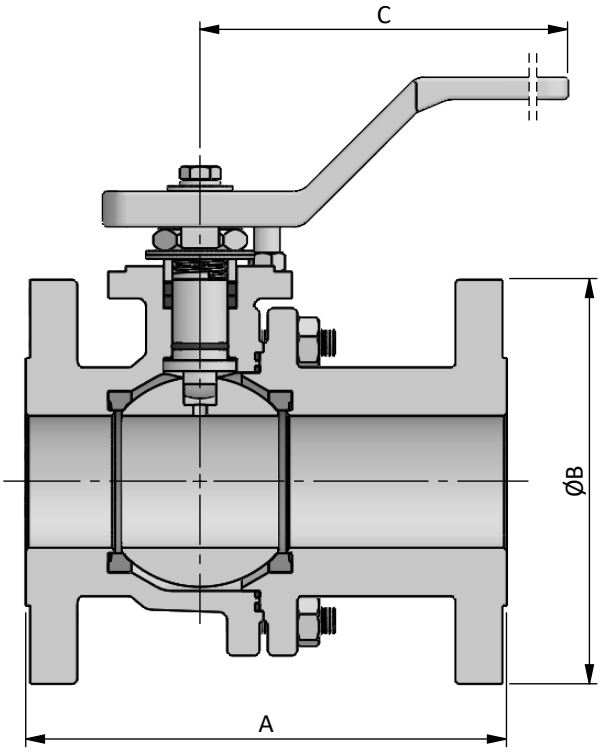

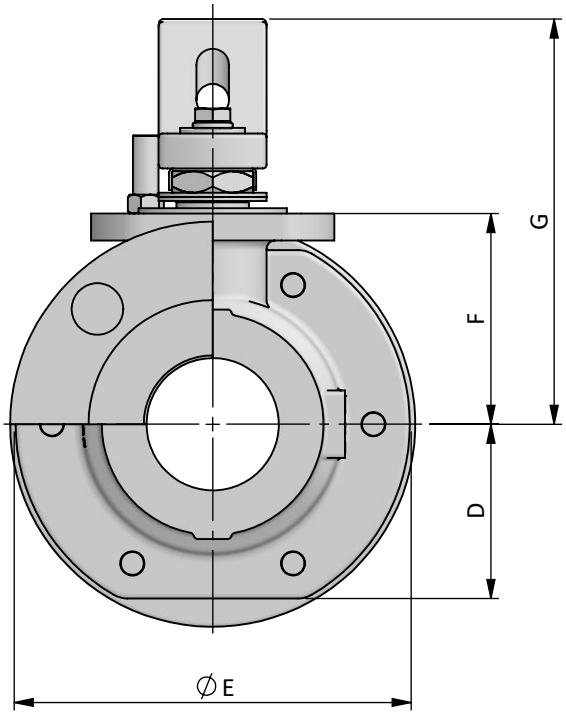

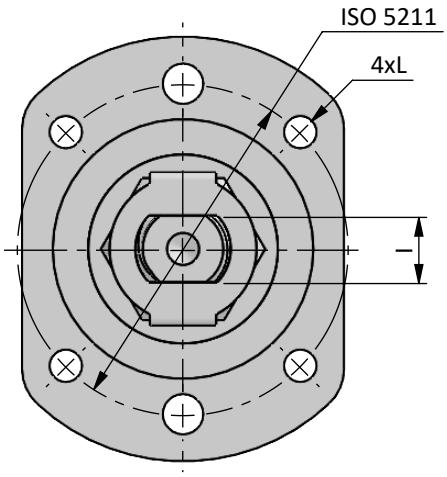

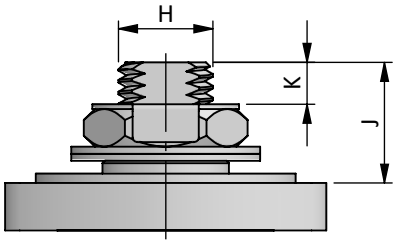

DN / Size		Dimensions															Automation						Weight Approx. [kg]			
FULL BORE		Ball Port	PN16				PN40				C	D	E	F	G	H	I	J	K	L	ISO 5211	PN16		PN40	
			F1		F4		F1		F4																
mm	inch		A	B	A	B	A	B	A	B												F1	F4	F1	F4
50	2''	49	-	-	-	-	230	165	150	165	300	65	145	80	150	20	14	26	9	M8	F07	-	-	14	12
65	2½''	62	290	185	170	185	290	185	170	185	360	80	175	95	175	24	18	35	14.5	M8	F07	18	14	20	17
80	3''	75	310	200	180	200	310	200	180	200	420	90	200	105	190	24	18	35	12	M10	F10	26	22	30	25
100	4''	100	350	220	190	220	350	235	190	235	480	115	250	135	225	30	22	42.5	16.5	M10	F10	40	35	45	36

CF SERIES

PN16/PN40

FULL BORE - DN150 (6") ÷ DN200 (8")

STANDARD DIN

BILL OF MATERIALS

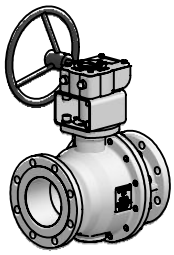

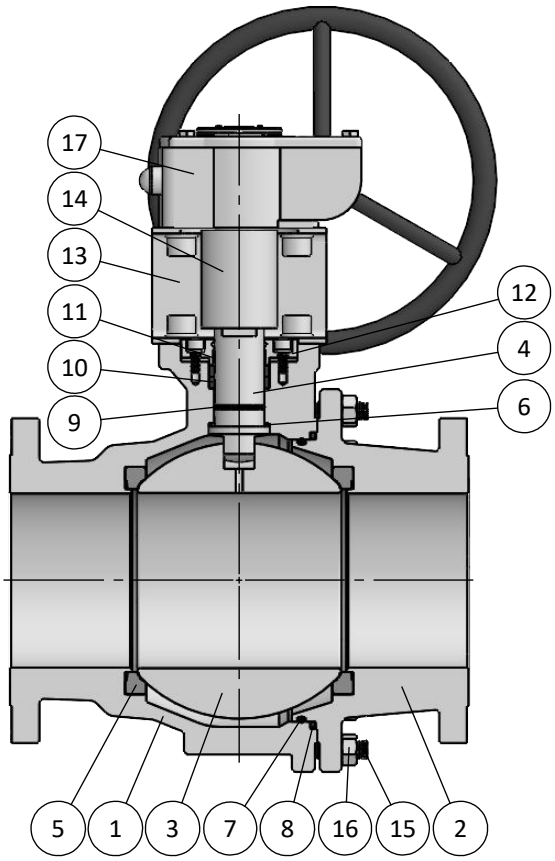

BILL OF MATERIALS						
Part	**Qt.**	**Description**		**CARBON STEEL VERSION**	**LT CARBON STEEL VERSION**	**STAINLESS STEEL VERSION**
1	1	Body		1.0619	1.6220	1.4408
2	1	End		1.0619	1.6220	1.4408
3	1	Ball		A351 CF8M		
4	1	Stem		A479 316/L		
5	2	Seat	↘	C-RPTFE		
6	1	Stem Thrust Seals	↘	C-RPTFE + PEEK		
7	1	Body O'Ring	↘	FKM		
8	1	Body Seal	↘	GRAPHITE		
9	1	O'Ring	↘	FKM		
10	1	Stem Packing Set	↘	GRAPHITE + PEEK		
11	1	Bearing	↘	PTFE		
12	1	Gland Packing		A479 316/L		
13	1	Bracket		STAINLESS ST.304		
14	1	Bracket Stem		A479 316/L		
15	-	Stud		Gr.8.8 Zinc.	A4 CL.70	
16	-	Nut		Gr. 8 Zinc.	A4 CL.70	
17	1	Gearbox		CAST IRON		

↘ TYPICAL SPARE PARTS

CF SERIES

PN16/PN40

FULL BORE - DN150 (6") ÷ DN200 (8")

DIN FLANGED ENDS

OVERALL DIMENSIONS

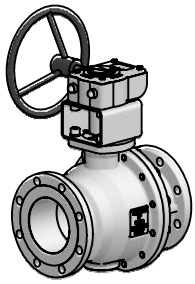

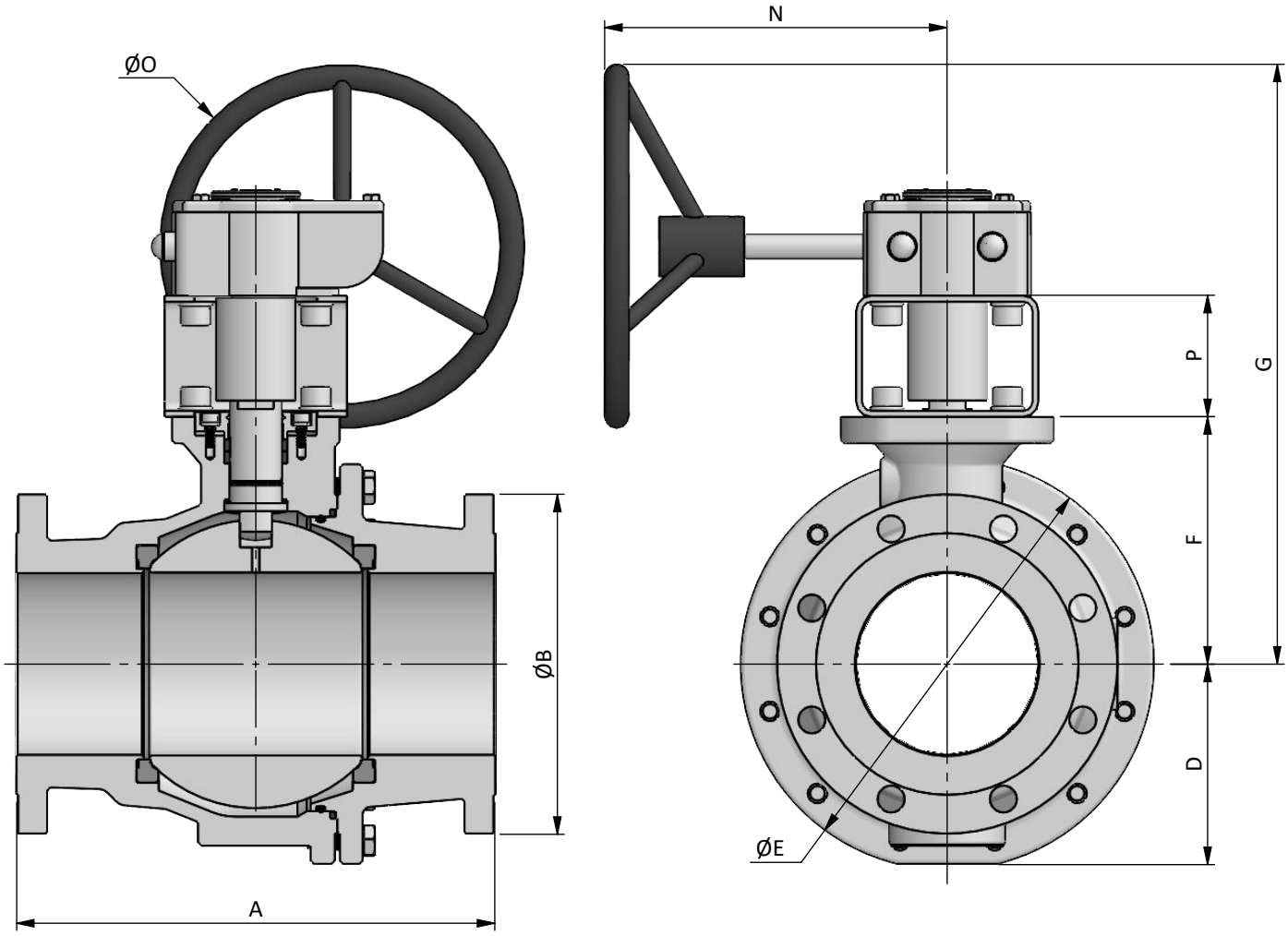

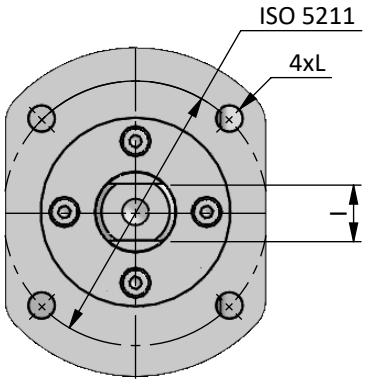

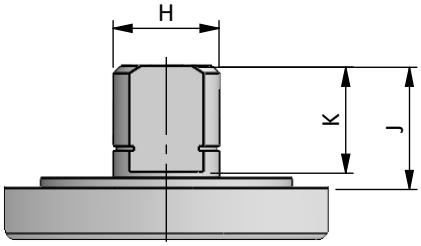

DN / Size		Dimensions										Automation									Weight Approx. [Kg]	
FULL BORE		Ball Port	PN	F#		F5		D	E	F	G	H	I	J	K	L	N	O	P	ISO 5211		
mm	inch			A	B	A	B														F#	F5
150	6"	151	16	-	-	350	285	165	340	205	495	42	30	48.5	28.5	M16	285	300	100	F14	-	105
200	8"	202		-	-	400	340	215	440	260	600	56	36	70	65	M20	285	400	100	F16	-	195
150	6"	151	40	403	300	-	-	170	350	205	495	42	30	48.5	28.5	M16	285	300	100	F14	110	-
200	8"	202		502	375	-	-	220	450	260	615	56	36	70	65	M20	330	400	100	F16	200	-

F# - FTF = CL300

CF SERIES

PN16/PN40

FULL BORE - DN015 (½") ÷ DN200 (8")

STANDARD DIN

LOCKING DEVICE

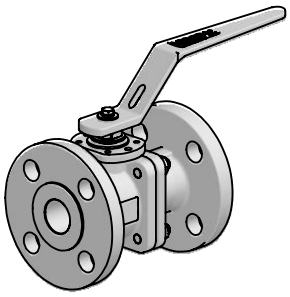

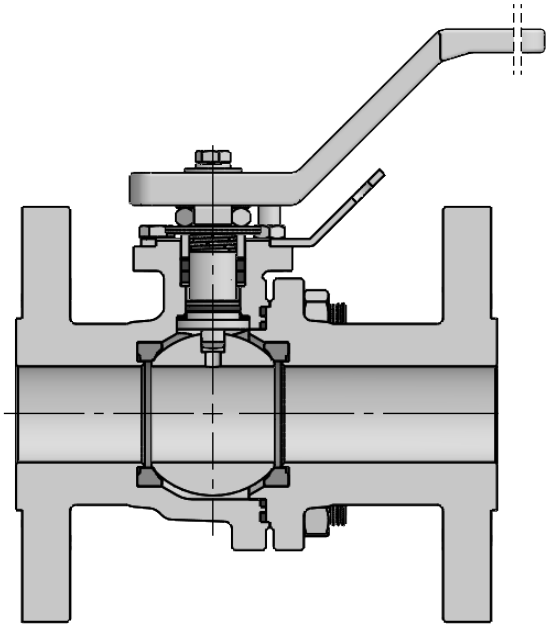

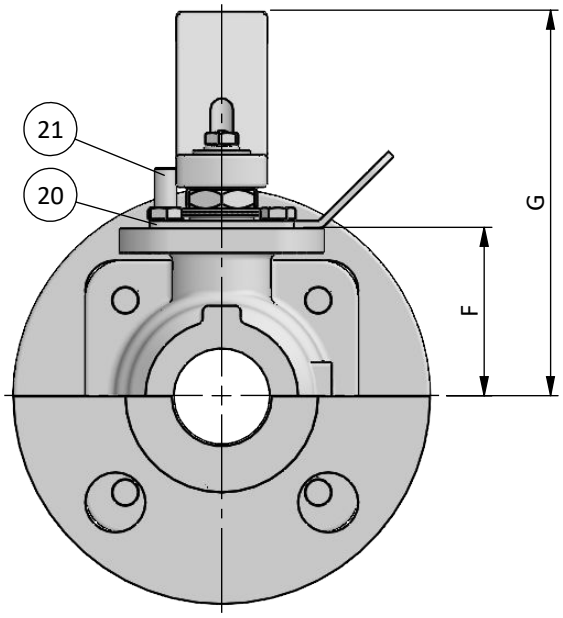

BILL OF MATERIALS			
Part	**Qt.**	**Description**	**Material**
20	1	Locking Plate	STAINLESS ST. 304
21	1	Stop Pin	STAINLESS ST. 316

DN / Size		**Dimensions**	
FULL BORE		**F**	**G**
mm	**inch**		
15	½''	35	90
20	¾''	40	100
25	1''	45	105
32	1¼"	55	125
40	1½''	60	125
50	2"	80	150
65	2½''	95	175
80	3"	105	190
100	4"	135	225
150	6"	GEARBOX	
200	8"		

CF SERIES

PN16/PN40

FULL BORE - DN015 (½") ÷ DN200 (8")

STANDARD DIN

BRACKET FOR AUTOMATION

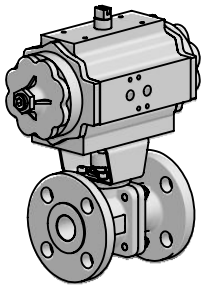

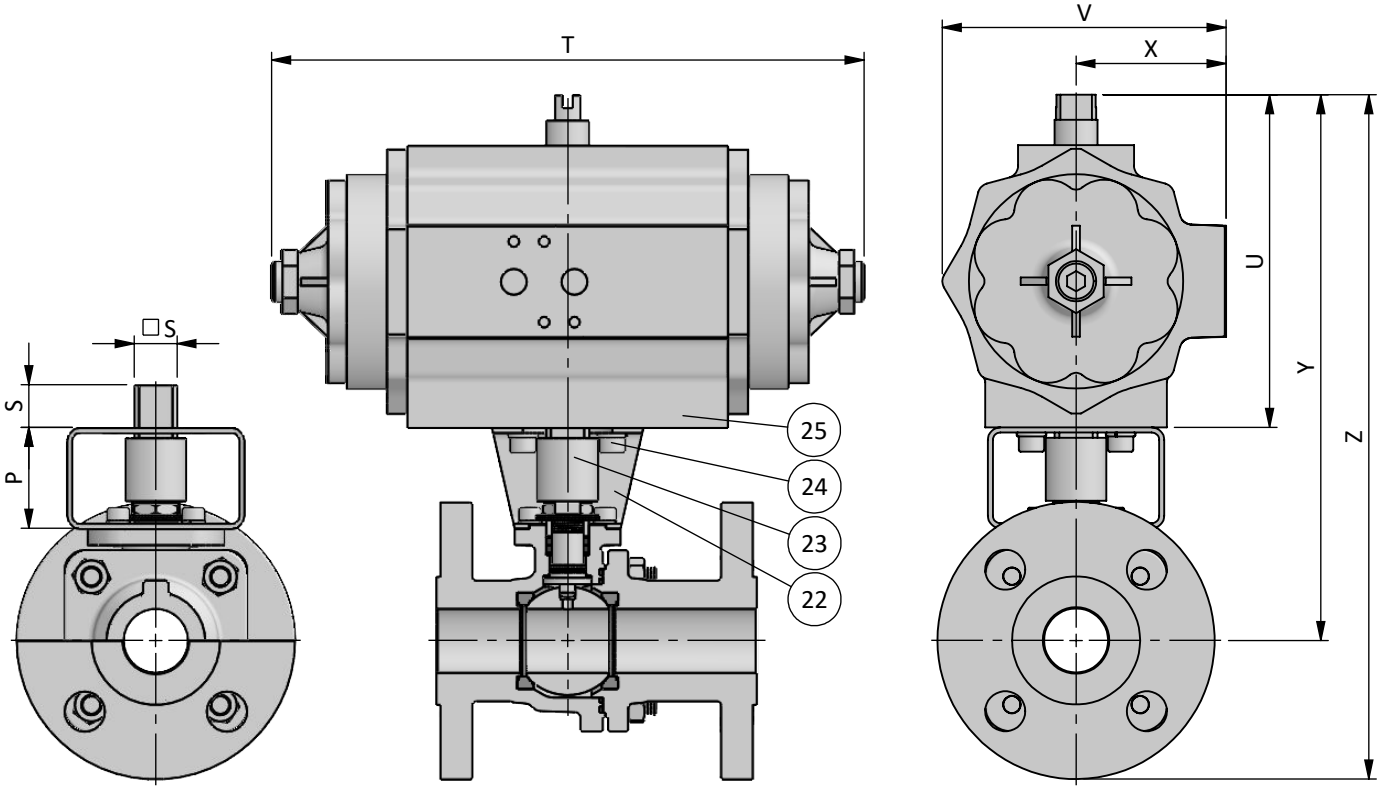

BILL OF MATERIALS			
Part	**Qt.**	**Description**	**Material**
22	1	Bracket	STAINLESS ST. 304
23	1	Coupling	A479 316/L
24	8	Bolt	STAINLESS ST. 316
25	1	Actuator	ALUMINIUM

DN / Size		Automation		Actuator*							Automation		Actuator*						
FULL BORE		P	S	PN16							P	S	PN40						
mm	inch			REF.	T	U	V	X	Y	Z			REF.	T	U	V	X	Y	Z
15	½''	40	11	-	-	-	-	-	-	-	40	11	005-10	180	111	89	49	190	235
20	¾''	40	11	-	-	-	-	-	-	-	40	11	005-10	180	111	89	49	195	245
25	1''	40	17	-	-	-	-	-	-	-	40	17	008-10	233	131	112	57	220	275
32	1¼''	50	17	-	-	-	-	-	-	-	50	17	008-10	233	131	112	57	235	305
40	1½''	50	19	-	-	-	-	-	-	-	50	19	012-08	280	131	112	57	240	315
50	2"	60	22	-	-	-	-	-	-	-	60	22	020-14	294	151	133	70	290	375
65	2½''	60	22	030-18	286	189	169	85	345	435	60	22	030-18	286	189	169	85	345	435
80	3"	100	22	030-18	286	189	169	85	395	495	100	27	040-18	344	199	169	85	405	505
100	4"	100	27	040-18	344	199	169	85	435	550	100	36	100-18	440	246	210	108	480	600
150	6"	100	46	200-20	537	272	232	120	580	720	100	36	250-40	460	340	305	151	645	805
200	8"	100	46	370-20	670	340	305	151	700	870	under request								

*Spring Return Pneumatic Actuators selected for PTFE and filled PTFE seats considering input air pressure of 5.5bar and minimum 25% safety margin

CF SERIES

PN16/PN40

FULL BORE - DN015 (½") ÷ DN200 (8")

STANDARD DIN

EXTENDED STEM

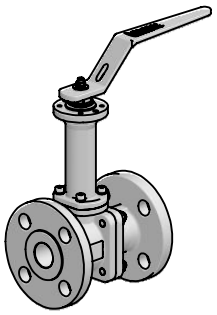

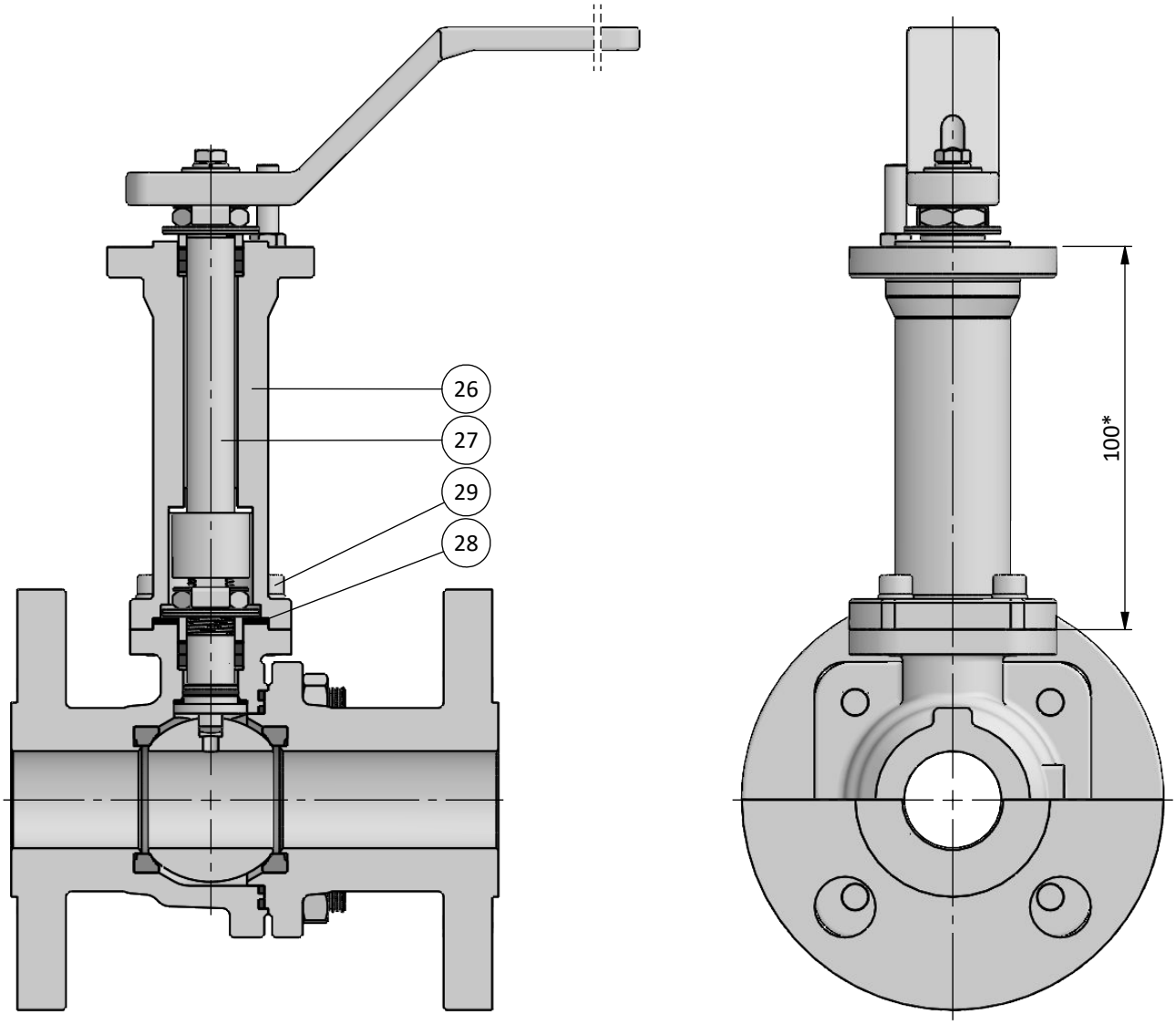

BILL OF MATERIALS			
Part	**Qt.**	**Description**	**Material**
26	1	Extension	A351 CF8M
27	1	Stem	A479 316/L
28	1	Extension Seal ↘	GRAPHITE
29	4	Bolt	STAINLESS ST. 316

* Size 6" and 8" valve extension height is 150mm and 200mm

CF SERIES

FULL BORE - DN015 (½") ÷ DN200 (8")
STANDARD DIN PN16/PN40
TECHNICAL SPECIFICATIONS

Pressure - Temperature Rating

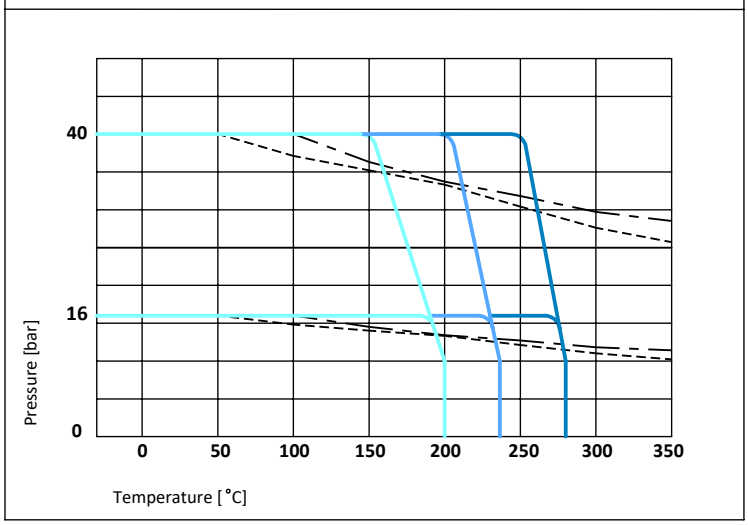

Working Conditions					
Material	mOT* [°C]				MOT* [°C]
	1.0619	1.6220	1.4408		ALL
PTFE TFM1600	-29	-46	-50	-100*	200
C-RPTFE	-29	-46	-50	-100*	240
PEEK	-29	-46	-50		280

*mOT - minimum Operating Temperature.
*MOT - Maximum Operating Temperature at 10 bar
Standard version recommended up to -50°C
*Extended version recommended up to -100°C

DN	Rating
FB 15 (½") to 200 (8")	PN40 - 40 bar
FB 65 (2½") to 200 (8")	PN16 - 16 bar

DN / Size		Torque Valve Figure [Nm] *												Maximum Allowable Stem Torque [Nm]					Flow Coefficient Cv
FULL BORE		C-RPTFE												316	S31803	S32760	S17400	718	
		PN16						PN40						MAST					
mm	inch	BTO	RTO	ETO	BTC	RTC	ETC	BTO	RTO	ETO	BTC	RTC	ETC						
15	½"	-	-	-	-	-	-	7	4	6	6	4	6	16	25	30	40	53.5	20
20	¾"	-	-	-	-	-	-	10	6	8	8	6	8	29.5	45	55	71.5	98.5	45
25	1"	-	-	-	-	-	-	14	8	11	11	8	12	29.5	45	55	71.5	98.5	75
32	1¼"	-	-	-	-	-	-	21	12	16	16	12	17	82.5	125	150	200	275	175
40	1½"	-	-	-	-	-	-	29	16	22	22	16	24	82.5	125	150	200	275	175
50	2"	-	-	-	-	-	-	40	22	30	30	22	32	110	240	290	385	535	300
65	2½"	58	32	44	44	32	47	65	36	49	49	36	52	205	445	540	715	1000	500
80	3"	70	39	53	53	39	56	80	44	60	60	44	64	205	445	540	715	1000	1000
100	4"	110	61	83	83	61	88	170	94	128	128	94	136	405	880	1075	1420	1950	2000
150	6"	350	193	263	263	193	280	500	275	375	375	275	400	1150	2525	3085	4075	5600	4500
200	8"	850	468	638	638	468	680	1650	908	1238	1238	908	1320	2530	5550	6800	8950	12350	10000

*Values without safety margin

Reference BTO 100% - RTO 55% | ETO 75% | BTC 75% | RTC 55% | ETC 80%

CERTIFICATION	CONSTRUCTION STANDARDS	TEST STANDARDS
CE Certification acc. to PED 2014/68/EU Fire Safe Design acc. to API 607Ed.6/ISO 10497 ATEX II 2GD acc. to 2014/34/EU Fugitive Emissions Class B acc. to ISO 15848 CO1 (-46°C to RT) Quality System Certified acc. to ISO 9001	ISO 17292 DIN EN 1092-1 EN 558-1 ISO 5211	Pressure tests according to: EN12266-1 / API 598 / ISO 5208 Rate A Tests applied: Hydrostatic Shell Test Hydrostatic Seat Test Pneumatic Tightness Test Pneumatic Seat Test EN 10204 type 3.1 Certificate

Standards acc. to the latest available revision

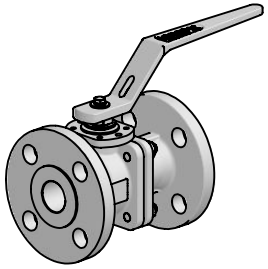
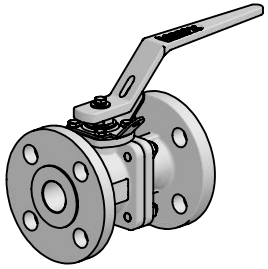
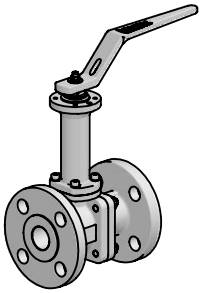
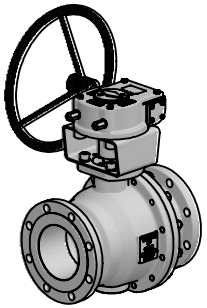

SERIE	CLASS	VERSION	PORT	DN	ENDS	BODY	BALL | STEM	BOLTING	SEATS | 1ª SEAL	PACKING | 2ªSEAL | O'RING	OPTIONS
CF	1 - PN16	6 - DIN	F - FB	015	FLANGED RF	A - 1.0619	E - A351 CF8M | A564 S17400	A - 8.8	1 - PTFE | PTFE	**1 - Grafite | Grafite | FKM**	C - Spring Return
	2 - PN40			020	F2 - DIN F4	B - 1.6220	**F - A351 CF8M | A479 316**	F - A4 CL.70	2 - TFM 1600 | PTFE	2 - V TFM 1600 | PTFE	D - Simple Extension 60 mm
				025	F3 - DIN F1	F - 1.4408	G - A351 CF8 | A479 304		**3 - C-RPTFE | C-RPTFE**		E - Extension 100 mm
				032		Z - Others	Z - Others		4 - PEEK NATURE | C-RPTFE		F - Bracket Automation
				040					6 - DEVLON | C-RPTFE		G - Gear Box
				050					7 - UHMWPE | UHMWPE		H - Actuators
				065							L - Locking Lever/Handle
				080							I - Switch Box / Limit Swiches
				100							O - Oval Lever/Handle
				150							R - Bare Shaft / Bare Stem
				200							S - Solenoid Valve
											T - Upstream Relief Hole
											W - "V" Ball Port
											Y - Full Execution SS.316
											Z - Others

Example:

CF26F015F2F2AFA31

CF16F080F3F3FFF22L

INDUSTRIAL RANGE

XF Series
3 pieces bolted - Floating
Cl 300 to 600
DN ⅜” (10) to 6” (150)

SF Series
3 pieces bolted - Floating
Cl 300 to 800
DN ⅜” (10) to 4” (100)

BF Series
2 split body - Floating
Cl 150 to 600
DN ½” (15) to 4” (100)

HF Series
3 pieces bolted - Floating
Cl 1500/2500
DN ⅜” (10) to 2” (50)

QF Series
Multi-ways - Floating
Cl 150 to 600
DN ½” (15) to 2” (50)

VTR Series
3 pieces bolted - Trunnion
Cl 150 to 2500
DN ½” (15) to 12” (300)

OTHER RANGE

SANITARY RANGE
XP / RP / LP / MP / QP

CRYOGENIC RANGE
CCF / CXF / CBF / CSF / CVT

METALLIC SEATS RANGE
XFM / CFM / BFM / SFM / VTM