緯凡金屬股份有限公司
TRANSWORLD STEEL ENTERPRISE CO., LTD

Operation
&
Maintenance
Manual

Product Name: Three Piece Ball Valve

Product Type: Series S300 / S303 / S304 / S305 / S320
S400 / S600 / S603 / S604 / S605 / S701
S704 / S711 / S802 / S900 / S904 / T531
T801 /

Author: Alice Sun Date: February 29, 2024
Review: Felix Zheng Date: February 29, 2024
Approval:Adam Shih Date: March 5, 2024

Version: 1.0
Status: Released on March 8, 2024)

Headquarters: No. 34, Gongye 14th Rd., Taichung City, 412038, Taiwan (R.O.C.)
TEL: +886-04-22716107 | Email: info@tawdvalve.com

INSTALLATION & MAINTENANCE MANUAL

For Series S300 / S303 / S304 / S305 / S320 / S400 / S600 / S603 / S604 / S605 / S701 S704 / S711 / S802 / S900 / S904 / T531 / T801 /

1. Product Structure

TAWD 3-Piece ball valve has a main body and two end caps connecting pipes, available in full-bore and reduced-bore specifications

Series S300/S303

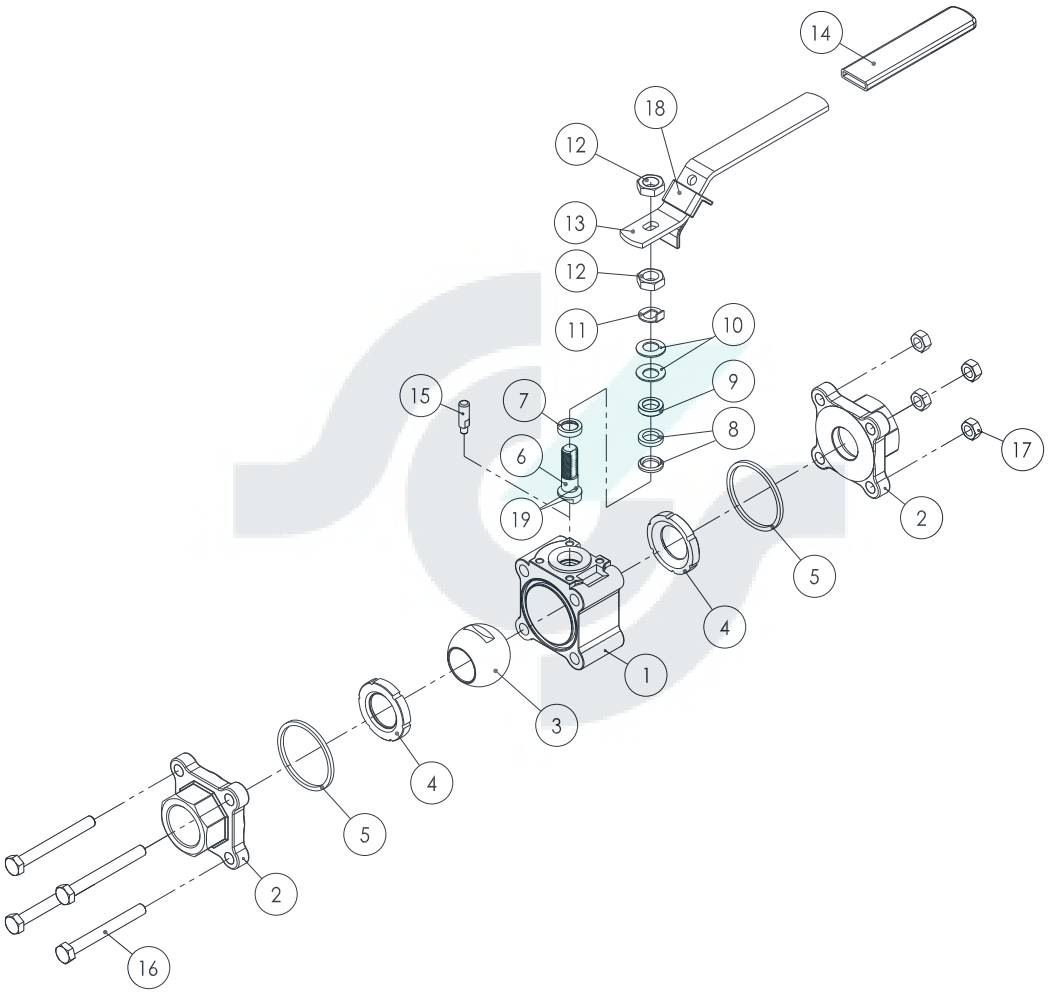

No.	Part Name	No.	Part Name	No.	Part Name
1	Body	**8**	Gland Packing	**15**	Stop Pin
2	End Cap	**9**	Gland Bush	**16**	Bolt
3	Ball	**10**	Belleville Washer	**17**	Bolt Nut
4	Seat	**11**	Stop Washer	**18**	Locking Device
5	Joint gasket	**12**	Stem Nut	**19**	Anti-Static Device
6	Stem	**13**	Handle	**20**	
7	Thrust Washer	**14**	Handle Cover	**21**	

Series S304

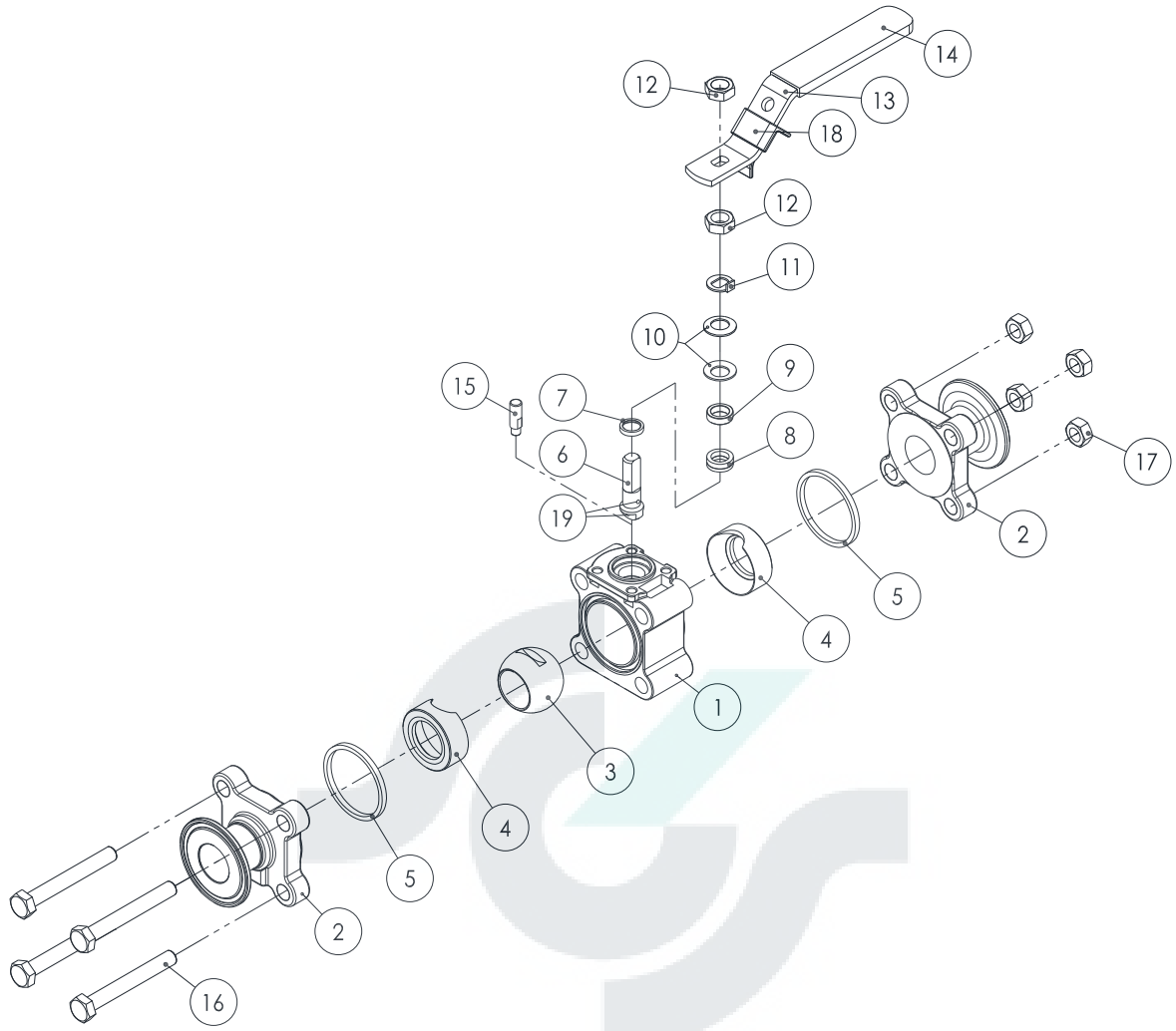

No.	Part Name	No.	Part Name	No.	Part Name
1	Body	**8**	Gland Packing	**15**	Stop Pin
2	End Cap	**9**	Gland Bush	**16**	Bolt
3	Ball	**10**	Belleville Washer	**17**	Bolt Nut
4	Seat	**11**	Stop Washer	**18**	Locking Device
5	Joint gasket	**12**	Stem Nut	**19**	Anti-Static Device
6	Stem	**13**	Handle	**20**	
7	Thrust Washer	**14**	Handle Cover	**21**	

Series S305

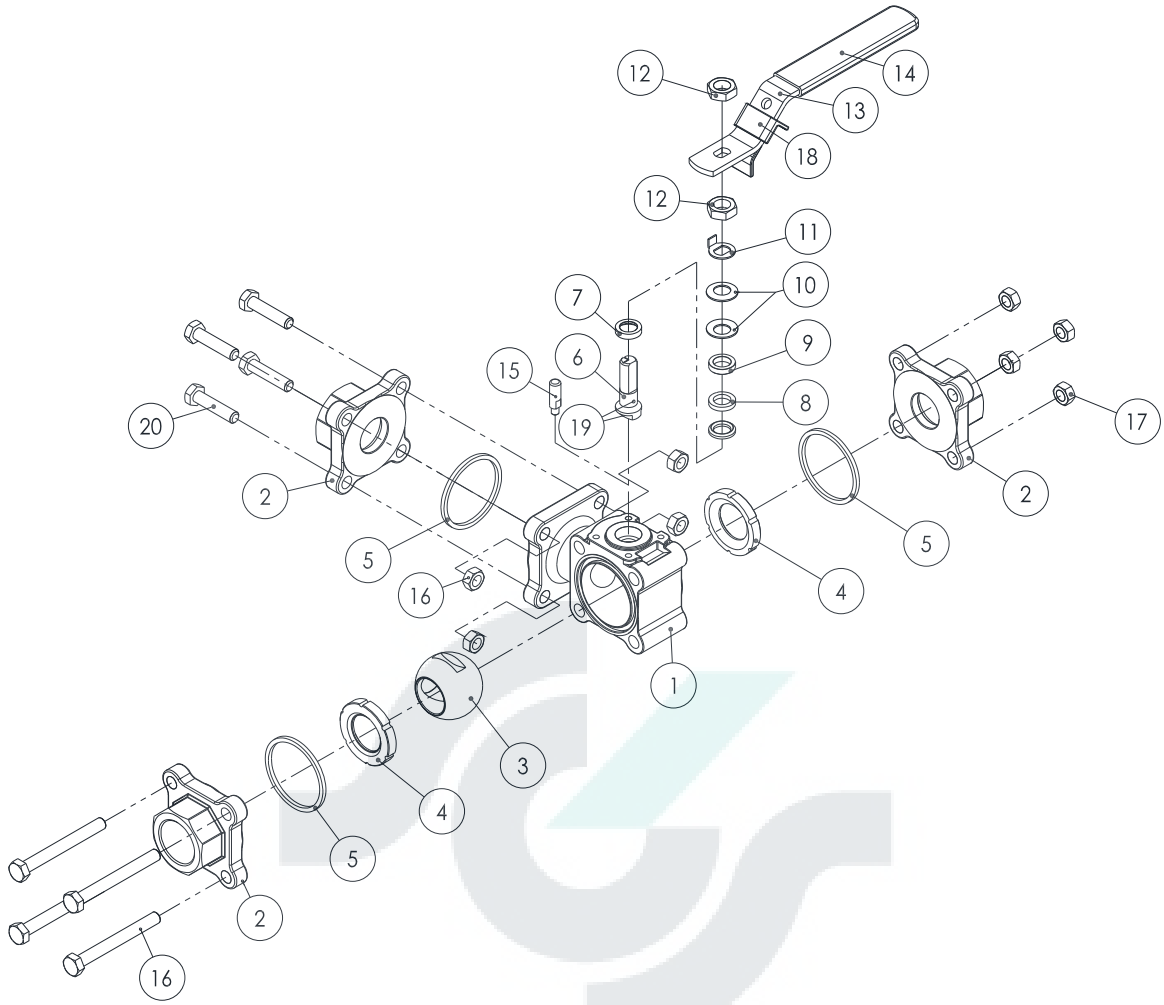

No.	Part Name	No.	Part Name	No.	Part Name
1	Body	**8**	Gland Packing	**15**	Stop Pin
2	End Cap	**9**	Gland Bush	**16**	Bolt
3	Ball	**10**	Belleville Washer	**17**	Bolt Nut
4	Seat	**11**	Stop Washer	**18**	Locking Device
5	Joint gasket	**12**	Stem Nut	**19**	Anti-Static Device
6	Stem	**13**	Handle	**20**	Bolt
7	Thrust Washer	**14**	Handle Cover	**21**	

Series S320

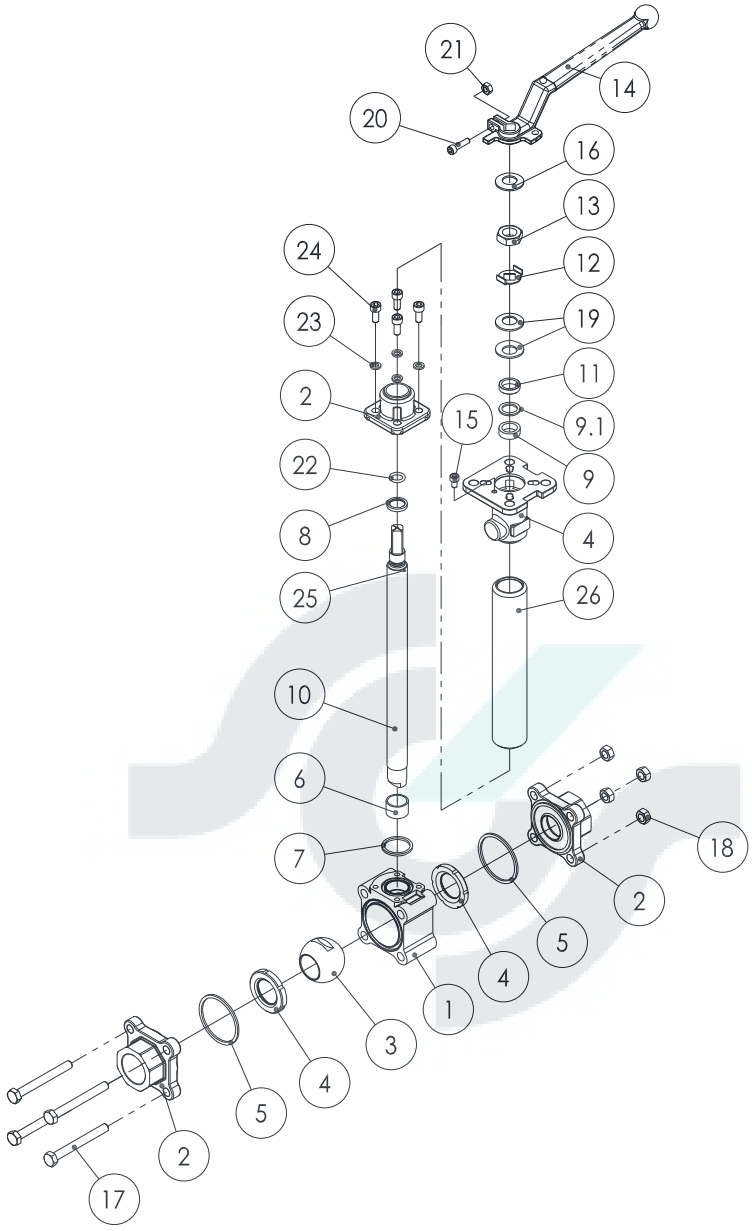

No.	Part Name	No.	Part Name	No.	Part Name
1	Body	**10**	Stem	**19**	Belleville Washer
2	End Cap	**11**	Gland Bush	**20**	Screw
3	Ball	**12**	Stop Washer	**21**	Nut
4	Seat	**13**	Stem Nut	**22**	O-Ring
5	Joint Gasket	**14**	Handle	**23**	Screw
6	Stem Bearing	**15**	Stop Pin	**24**	Screw
7	Join Gasket	**16**	Stem Washer	**25**	Anti-Static Device
8	Thrust Washer	**17**	Bolt	**26**	Extended Bonnet
9	Gland Packing	**18**	Bolt Nut	**27**	

Series S400 / S600 / S603

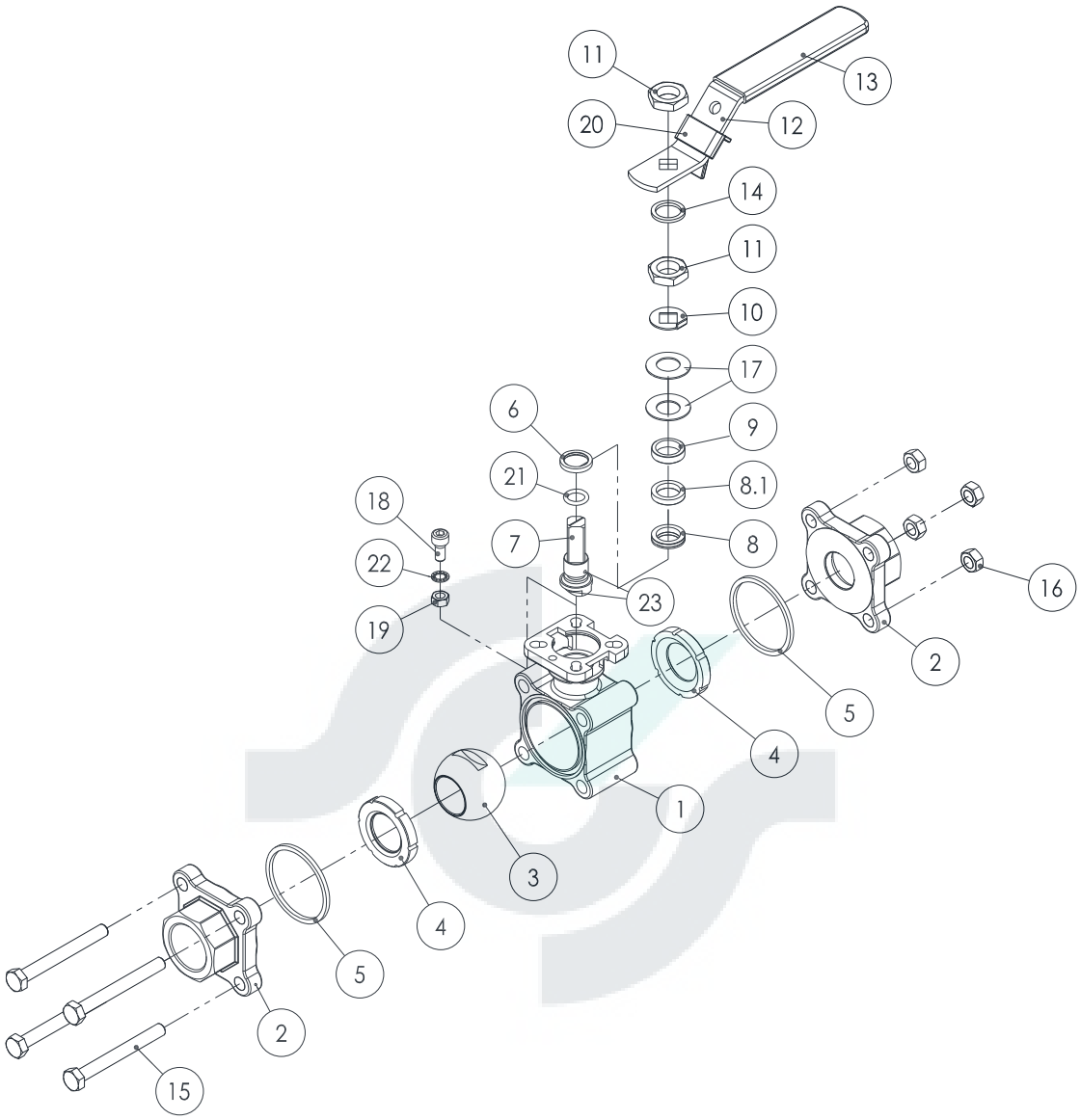

No.	Part Name	No.	Part Name	No.	Part Name
1	Body	**9**	Gland Bush	**18**	Stop Pin
2	End Cap	**10**	Stop Washer	**19**	Pin Nut
3	Ball	**11**	Stem Nut	**20**	Locking Device
4	Seat	**12**	Handle	**21**	O-Ring
5	Joint Gasket	**13**	Handle Cover	**22**	Washer
6	Thrust Washer	**14**	Stem Washer	**23**	Anti-Static Device
7	Stem	**15**	Bolt	**24**	
8	Gland Packing	**16**	Bolt Nut	**25**	
8.1	Gland Packing	**17**	Belleville Washer	**26**	

Series S604

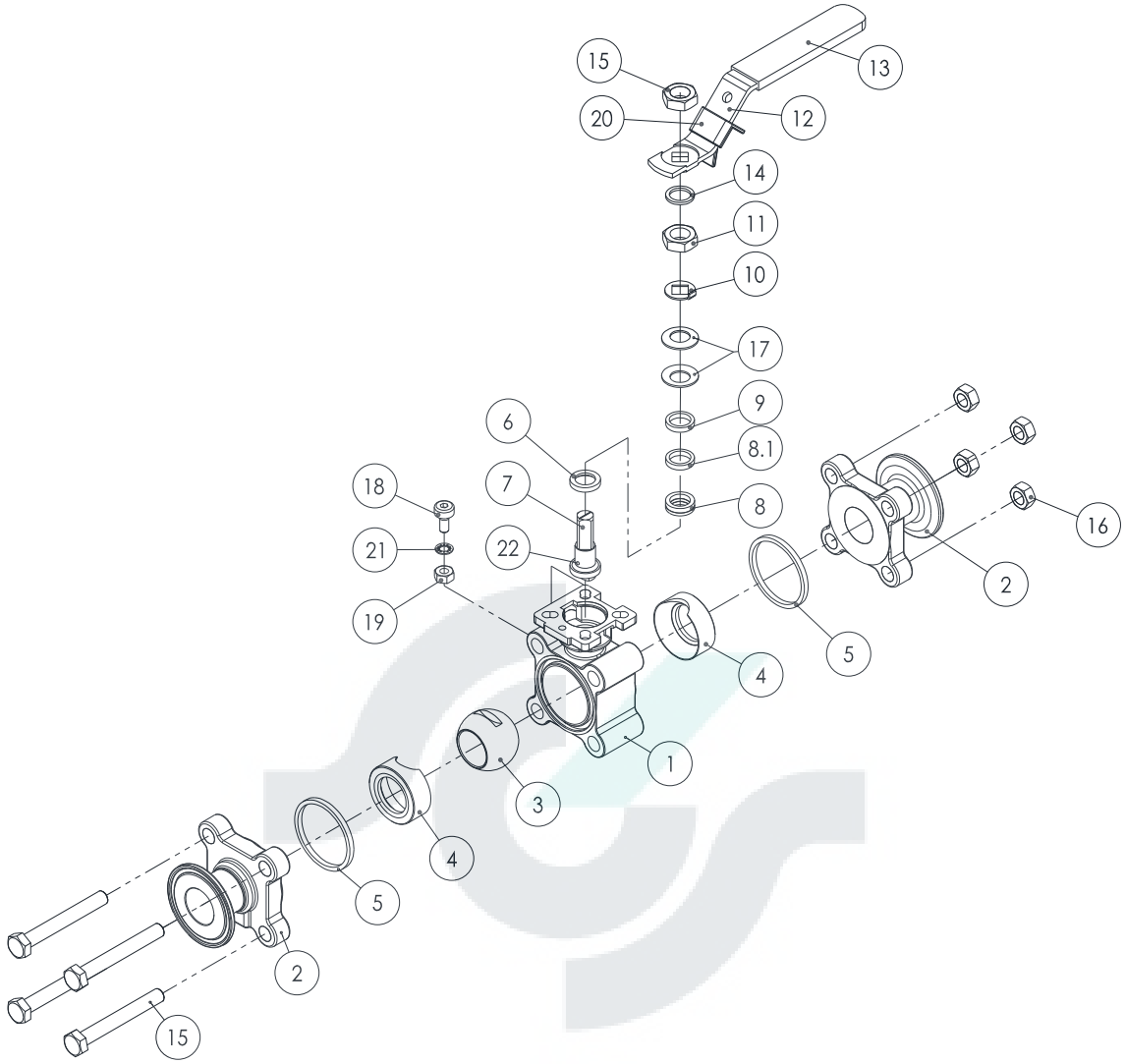

No.	Part Name	No.	Part Name	No.	Part Name
1	Body	**9**	Gland Bush	**18**	Stop Pin
2	End Cap	**10**	Stop Washer	**19**	Pin Nut
3	Ball	**11**	Stem Nut	**20**	Locking Device
4	Seat	**12**	Handle	**21**	Washer
5	Joint Gasket	**13**	Handle Cover	**22**	Anti-Static Device
6	Thrust Washer	**14**	Stem Washer	**23**	
7	Stem	**15**	Bolt	**24**	
8	Gland Packing	**16**	Bolt Nut	**25**	
8.1	Gland Packing	**17**	Belleville Washer	**26**	

Series S605

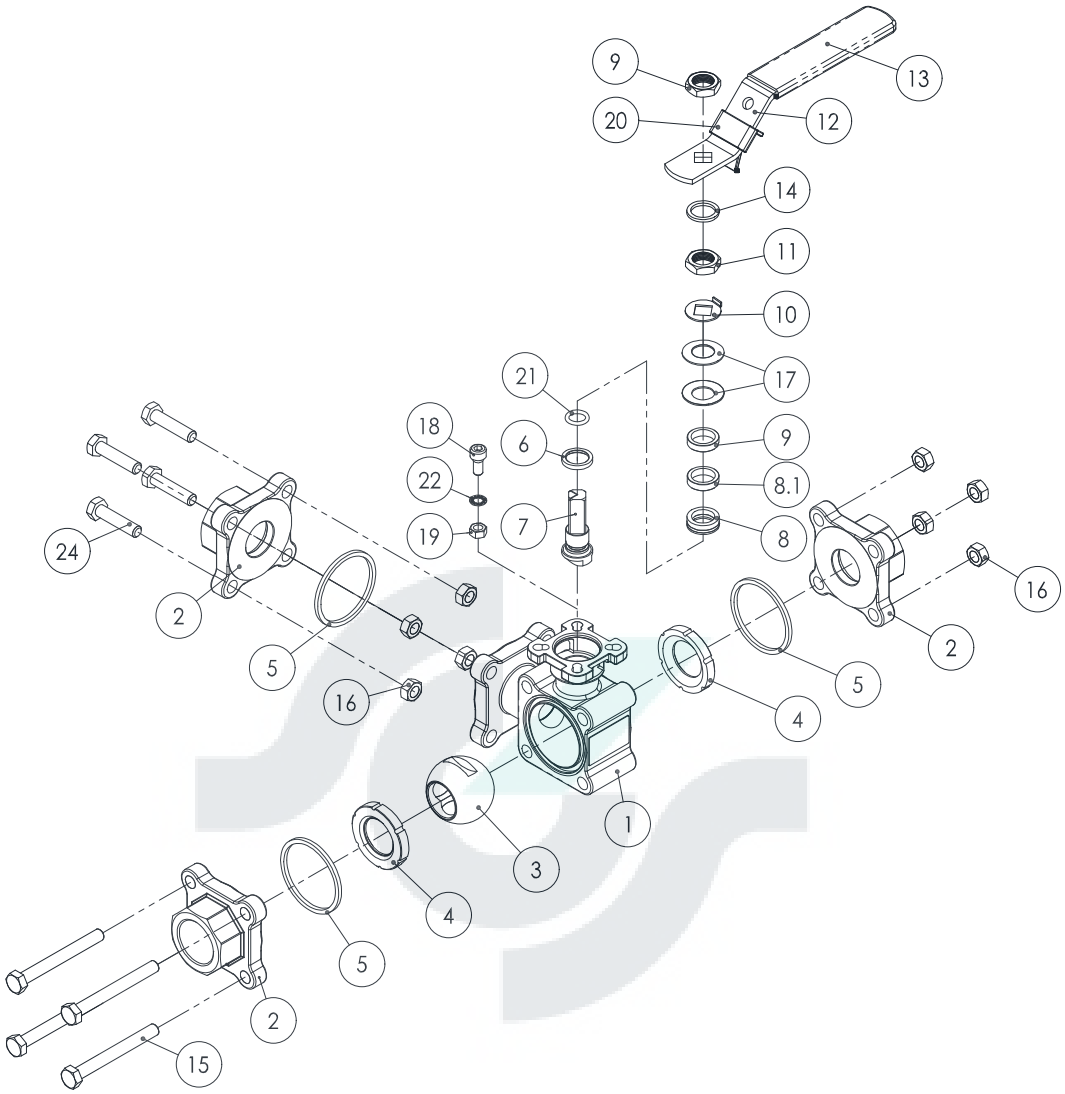

No.	Part Name	No.	Part Name	No.	Part Name
1	Body	**9**	Gland Bush	**18**	Stop Pin
2	End Cap	**10**	Stop Washer	**19**	Pin Nut
3	Ball	**11**	Stem Nut	**20**	Locking Device
4	Seat	**12**	Handle	**21**	O-Ring
5	Joint Gasket	**13**	Handle Cover	**22**	Washer
6	Thrust Washer	**14**	Stem Washer	**23**	Anti-Static Device
7	Stem	**15**	Bolt	**24**	Welding Cap
8	Gland Packing	**16**	Bolt Nut	**25**	Bolt
8.1	Gland Packing	**17**	Belleville Washer	**26**	Cap Seal

Series S701

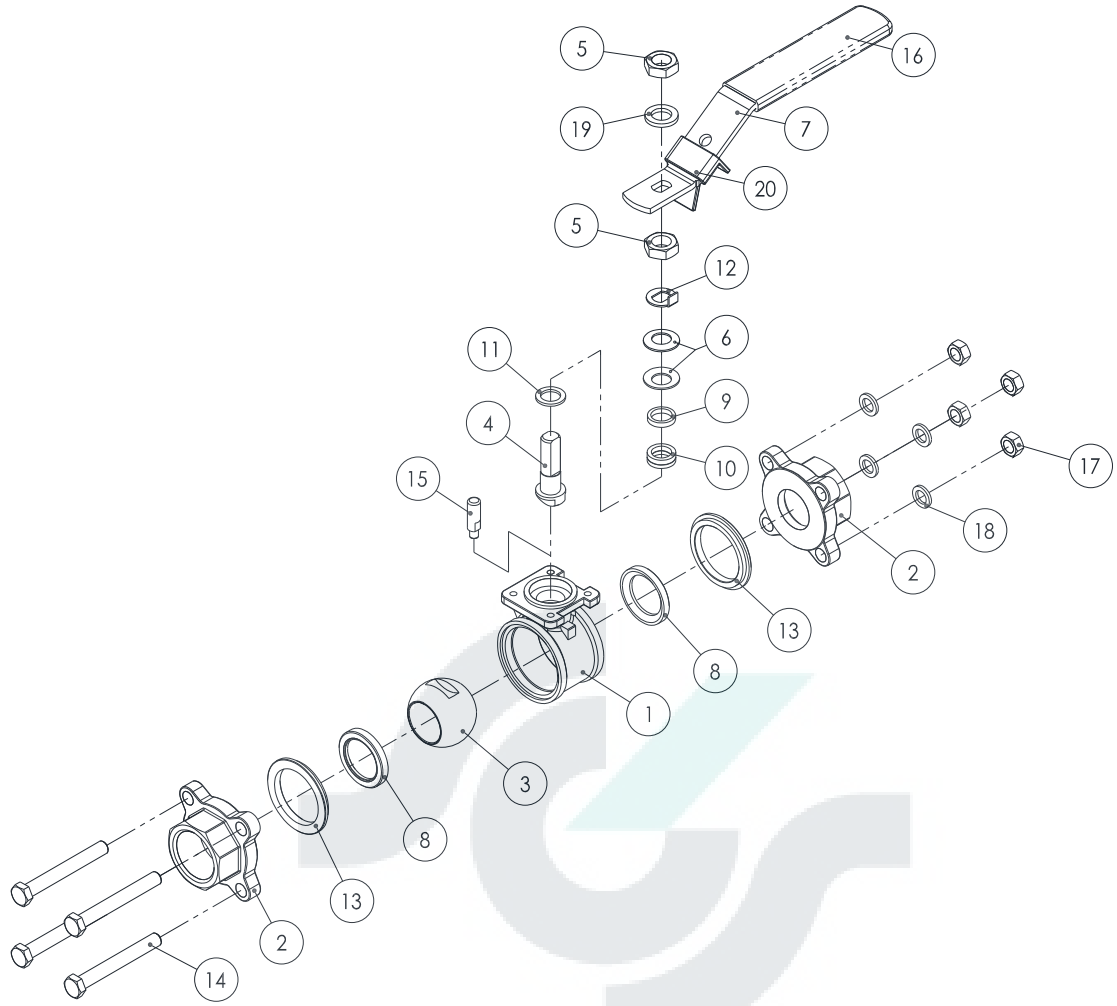

No.	Part Name	No.	Part Name	No.	Part Name
1	Body	**8**	Seat	**15**	Stop Pin
2	End Cap	**9**	Gland Bush	**16**	Handle Cover
3	Ball	**10**	Gland Packing	**17**	Bolt Nut
4	Stem	**11**	Thrust Washer	**18**	Bolt Washer
5	Stem Nut	**12**	Stop Washer	**19**	Stem Washer
6	Belleville Washer	**13**	Joint Gasket	**20**	Locking Device
7	Handle	**14**	Bolt	**21**	

Series S704

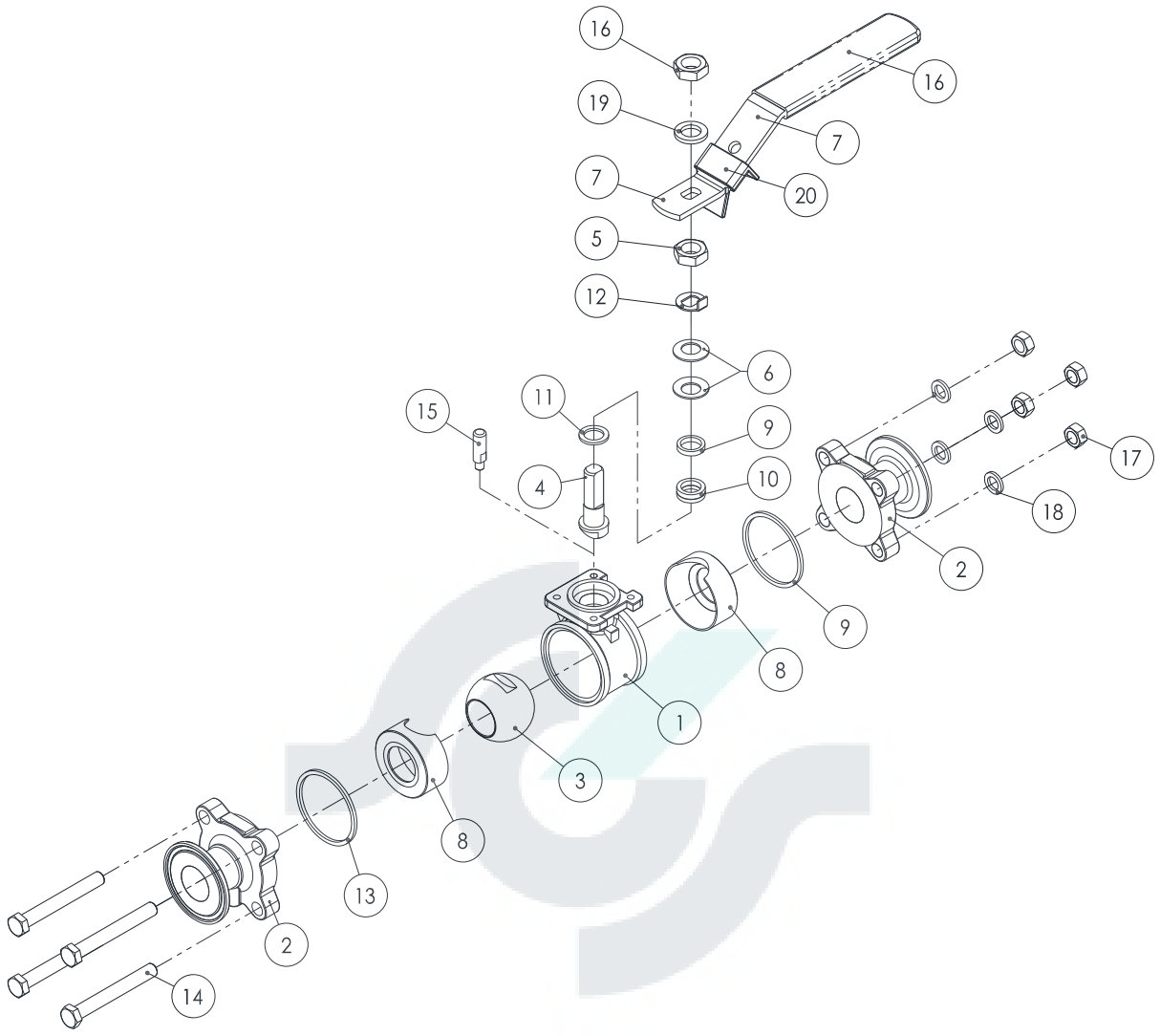

No.	Part Name	No.	Part Name	No.	Part Name
1	Body	**8**	Seat	**15**	Stop Pin
2	End Cap	**9**	Gland Bush	**16**	Handle Cover
3	Ball	**10**	Gland Packing	**17**	Bolt Nut
4	Stem	**11**	Thrust Washer	**18**	Bolt Washer
5	Stem Nut	**12**	Stop Washer	**19**	Stem Washer
6	Belleville Washer	**13**	Joint Gasket	**20**	Locking Device
7	Handle	**14**	Bolt	**21**	

Series S711

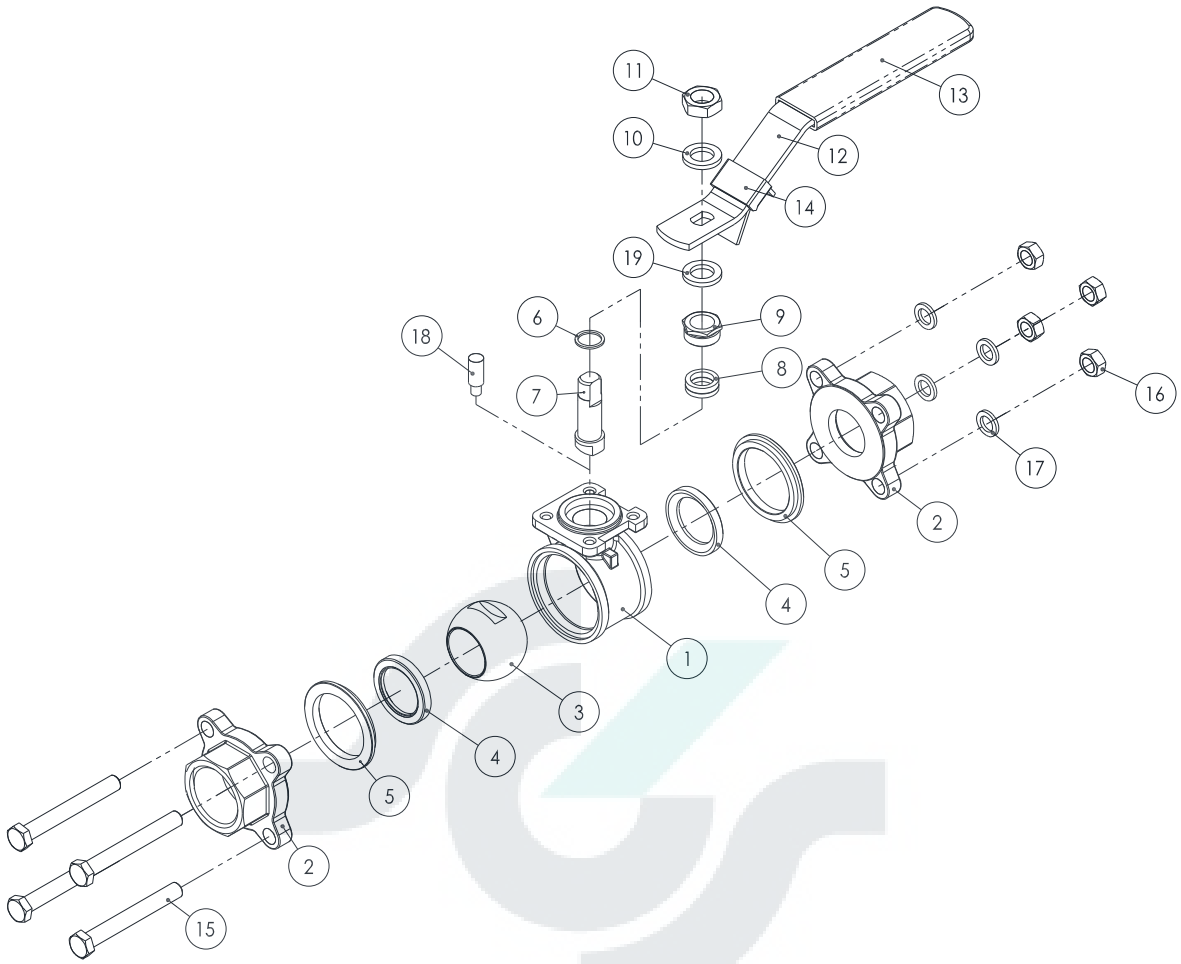

No.	Part Name	No.	Part Name	No.	Part Name
1	Body	**8**	Gland Packing	**15**	Bolt
2	End Cap	**9**	Gland Bush	**16**	Bolt Nut
3	Ball	**10**	Stem Washer	**17**	Bolt Washer
4	Seat	**11**	Stem Nut	**18**	Stop Pin
5	Joint Gasket	**12**	Handle	**19**	Handle Washer
6	Trust Washer	**13**	Handle Cover	**20**	
7	Stem	**14**	Locking Device	**21**	

Series S900

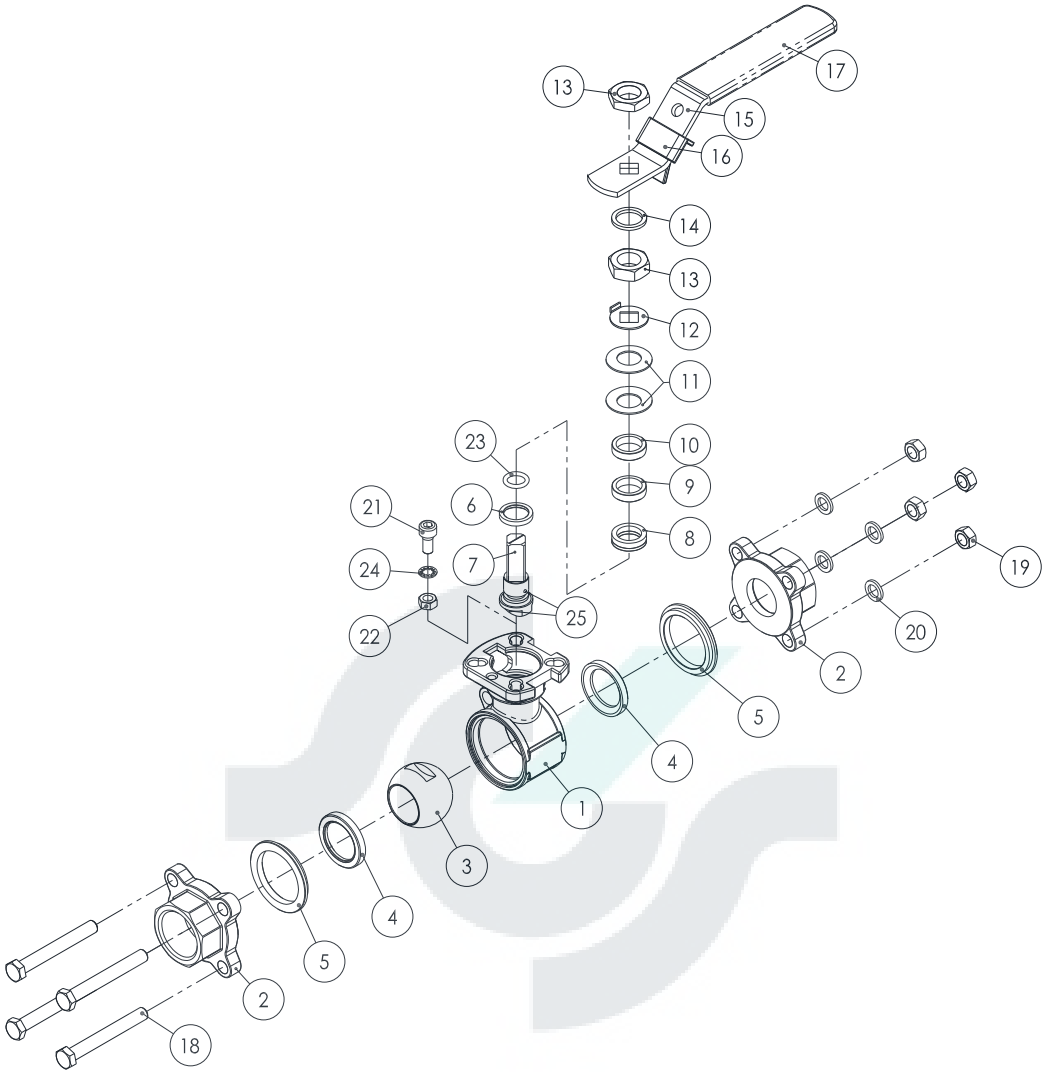

No.	Part Name	No.	Part Name	No.	Part Name
1	Body	**10**	Gland Bush	**19**	Bolt Nut
2	End Cap	**11**	Belleville Washer	**20**	Bolt Washer
3	Ball	**12**	Stop Washer	**21**	Stop Pin
4	Seat	**13**	Stem Nut	**22**	Pin Nut
5	Joint Gasket	**14**	Stem Washer	**23**	O-Ring
6	Trust Washer	**15**	Handle	**24**	Washer
7	Stem	**16**	Locking Device	**25**	Anti-Static Device
8	Gland Packing	**17**	Handle Cover	**26**	
9	Gland Packing	**18**	Bolt	**27**	

Series S904

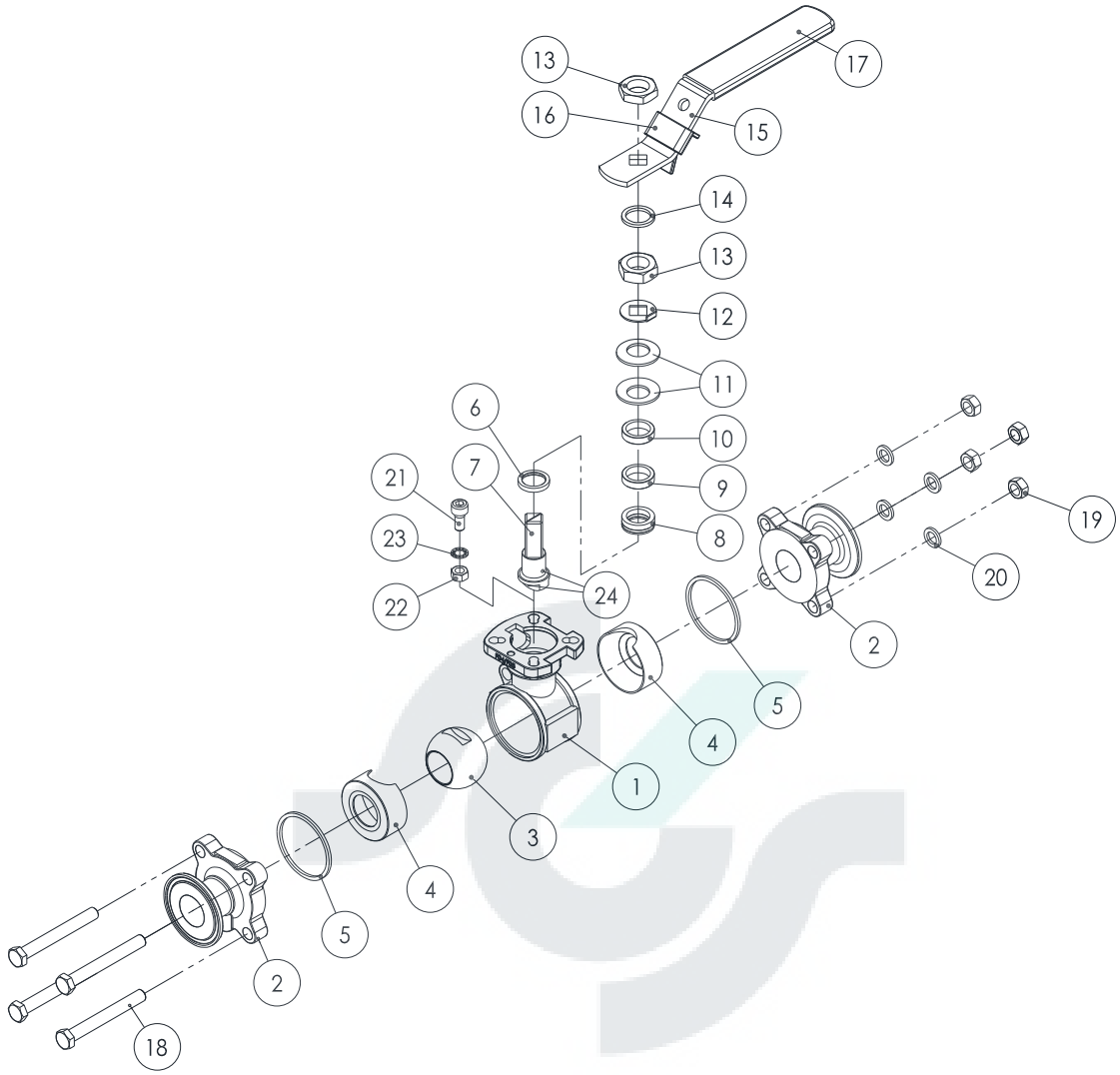

No.	Part Name	No.	Part Name	No.	Part Name
1	Body	**10**	Gland Bush	**19**	Bolt Nut
2	End Cap	**11**	Belleville Washer	**20**	Bolt Washer
3	Ball	**12**	Stop Washer	**21**	Stop Pin
4	Seat	**13**	Stem Nut	**22**	Pin Nut
5	Joint Gasket	**14**	Stem Washer	**23**	Washer
6	Trust Washer	**15**	Handle	**24**	Anti-Static Device
7	Stem	**16**	Locking Device	**25**	
8	Gland Packing	**17**	Handle Cover	**26**	
9	Gland Packing	**18**	Bolt	**27**	

Series T531

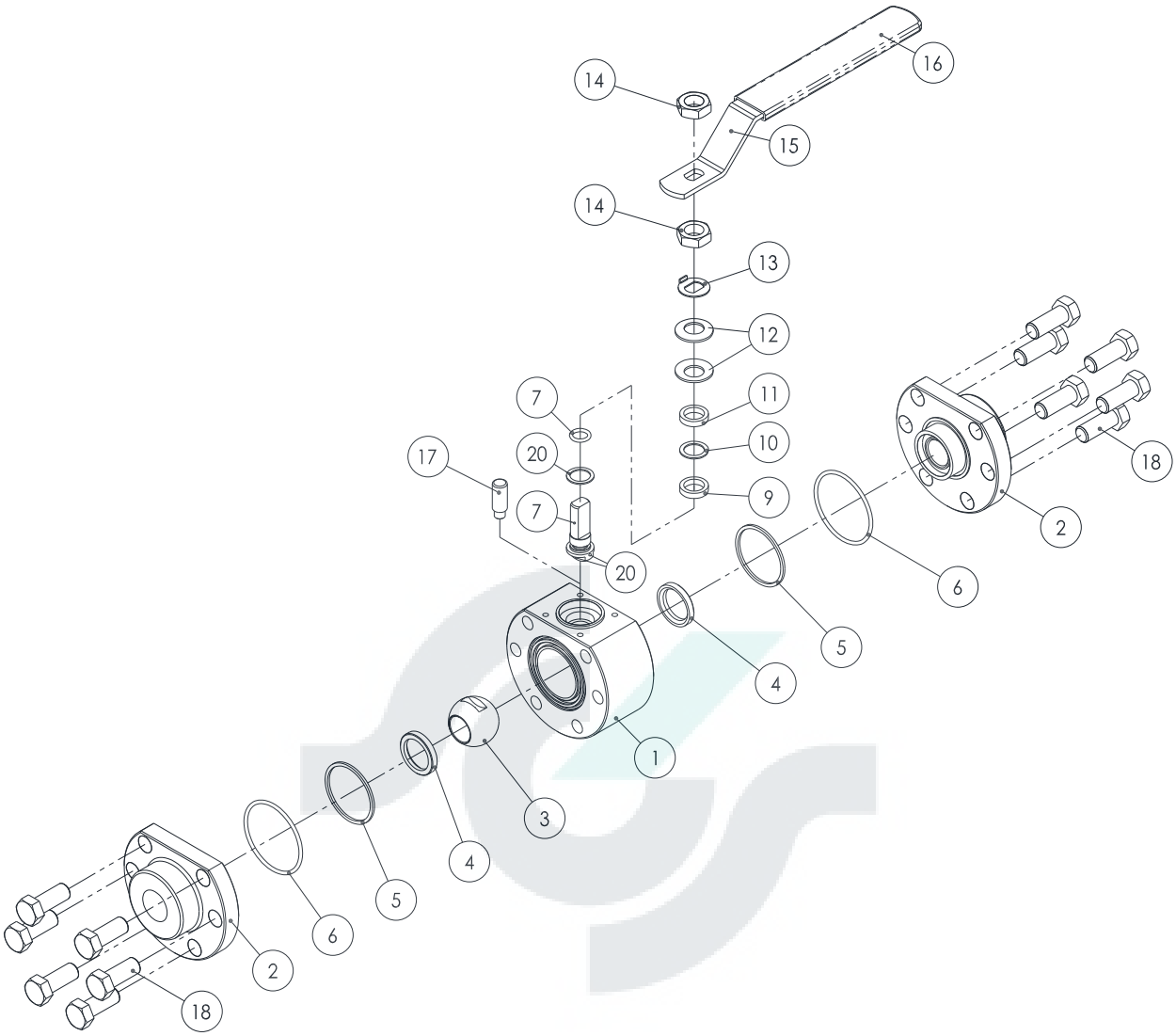

No.	Part Name	No.	Part Name	No.	Part Name
1	Body	**10**	Gland Packing	**19**	Anti-Static Device
2	End Cap	**11**	Gland Bush	**20**	O-Ring
3	Ball	**12**	Belleville Washer	**21**	
4	Seat	**13**	Stop Washer	**22**	
5	Joint Gasket	**14**	Stem Nut	**23**	
6	O-Ring	**15**	Handle	**24**	
7	Stem	**16**	Handle Cover	**25**	
8	Trust Washer	**17**	Stop Pin	**26**	
9	Gland Packing	**18**	Bolt	**27**	

Series S802

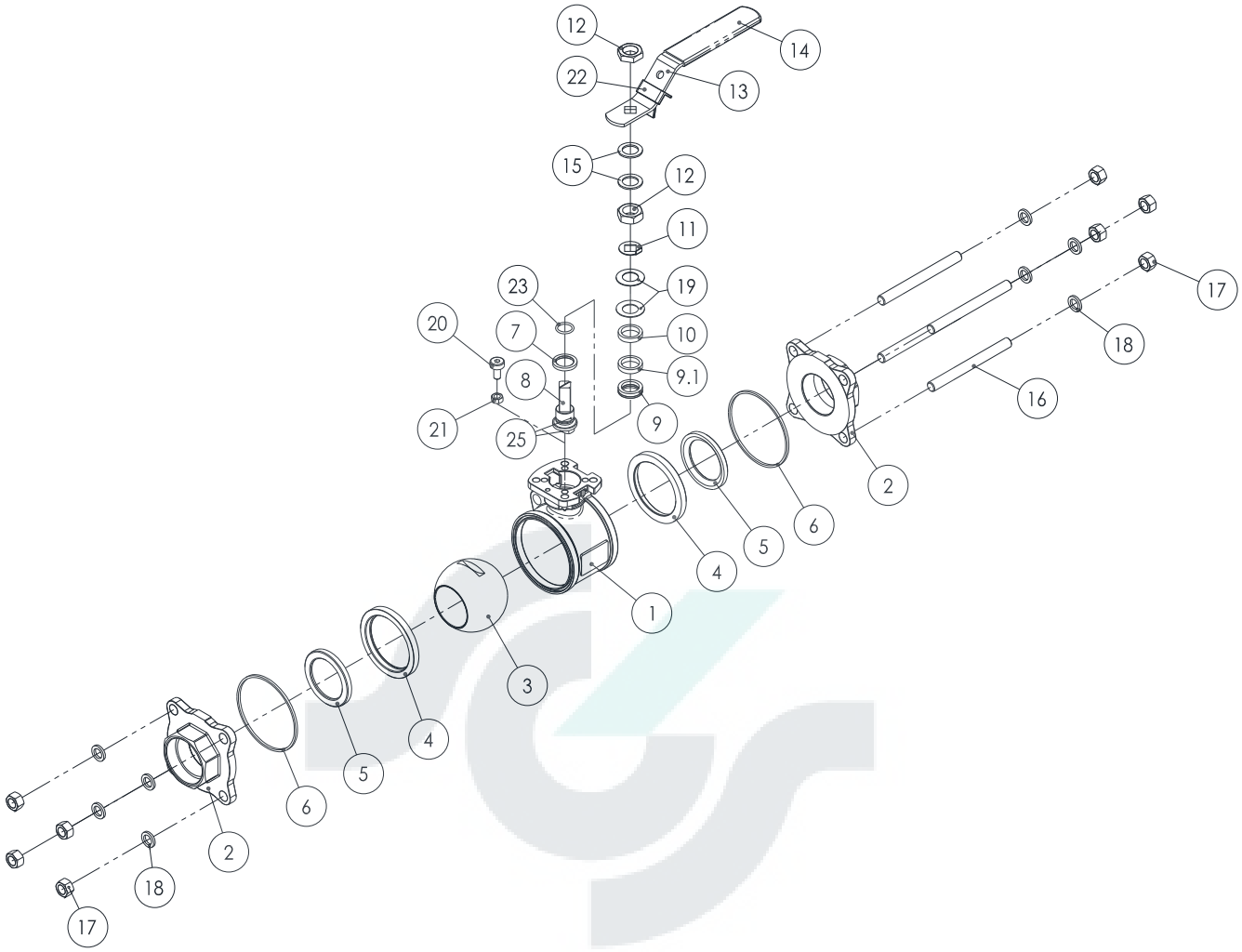

No.	Part Name	No.	Part Name	No.	Part Name
1	Body	**9.1**	Gland Packing	**18**	Bolt Washer
2	End Cap	**10**	Gland Bush	**19**	Belleville Washer
3	Ball	**11**	Stop Washer	**20**	Stop Pin
4	Seat Ring	**12**	Stem Nut	**21**	Pin Nut
5	Seat	**13**	Handle	**22**	Locking Device
6	Joint Gasket	**14**	Handle Cove	**23**	O-Ring
7	Trust Washer	**15**	Stem Washer	**24**	Washer
8	Stem	**16**	Bolt	**25**	Anti-Static Device
9	Gland Packing	**17**	Bolt Nut	**26**	

Series T801

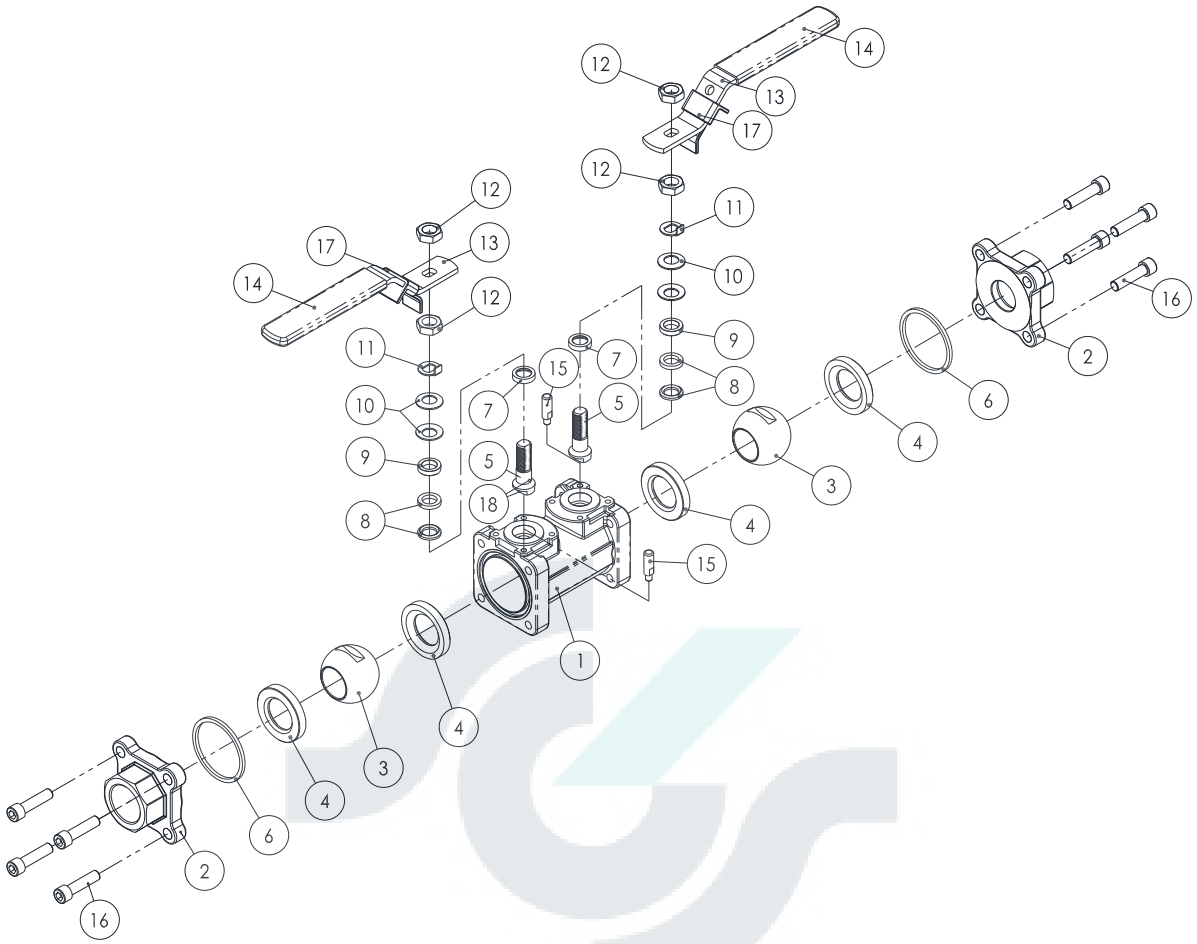

No.	Part Name	No.	Part Name	No.	Part Name
1	Body	**8**	Gland Packing	**15**	Stop Pin
2	End Cap	**9**	Gland Bush	**16**	Screw
3	Ball	**10**	Belleville Washer	**17**	Locking
4	Seat	**11**	Stop Washer	**18**	Anti-Static Device
5	Stem	**12**	Stem Nut	**19**	
6	Joint Gasket	**13**	Handle	**20**	
7	Thrust Washer	**14**	Handle Cover	**21**	

2. USE

Life of valve can be prolonged if the valve is used within the rated range, in accordance with pressure, temperature, and corrosion parameters.

3. Manual Operation

The valve's open or closed state is altered by giving the lever a quarter-turn (90-degrees).

— Valve in Open Position: The lever is parallel to the valve or pipeline.

— Valve in Closed Position: The lever is perpendicular to the valve or pipeline.

4. General Information for Installation

4.1 Installation of Threaded Valves:

— Use suitable thread sealing material such as Teflon, and screw ball valve body to the pipeline.

— Apply wrench only on the hexagon of the valve ends. Tightening by using the valve body or lever can seriously damage the valve.

— In some applications, screwed valves are back welded on site, these valves must be treated as per instructions for weld end valves before back welding.

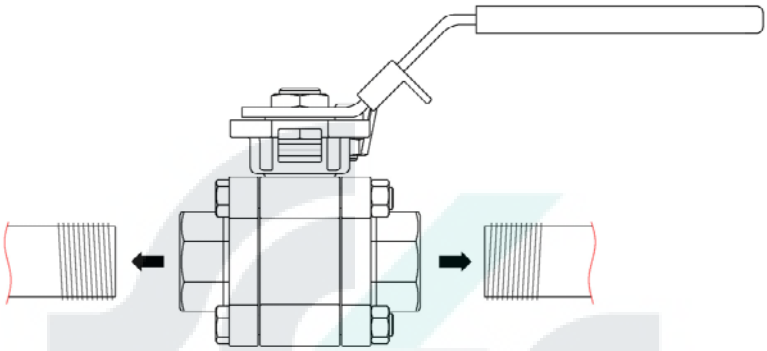

(Figure 1)

4.2 Installation of Weld-End Valves:

— Tack welds the valve on the pipe in four points on both end caps.

— With the valve in the open position, (lever to be parallel to the axis of the pipe), remove all the body bolts except one. Loosen the nut on the remaining bolt

— Swing the body outside the pipe and remove seats and ball to prevent accidental damage and protect the exposed valve body and ends from weld splatter.

— Finish welding both end caps on the pipe.

— When cooled down, clean both end caps and body surface.

— Lightly lubricate ball seats (with a media compatible lubricant) and Install ball and seats into body taking care to install lager curve of the seats facing the ball.

— Swing the body back in position and replace the bolts. Tighten all nuts slightly. This Operation is very important, to keep body and end caps perfectly parallel, thus preventing distortion of the end caps.

— Tighten body bolts evenly. Make sure that maximum tightening torque is observed.

— Check proper operation of the valve and hydrostatic system and check for leaks.

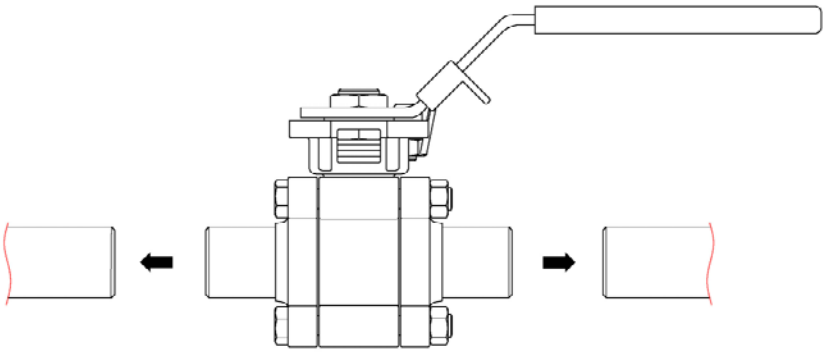

(Figure 2)

4.3 Installation of flanged-End Valves:

— The pipeline flanges must comply to the same flange standard in order to fit properly with the valve.

— The Tightness between the flanges must be guaranteed by means of a gasket, whose choice and assembly must be made by the installer.

— Ensure that flanges and pipe flanges are properly mounted, tighten the screws in two steps (smooth screwing to join and lock with a torque wrench), opposing bolts sequentially.

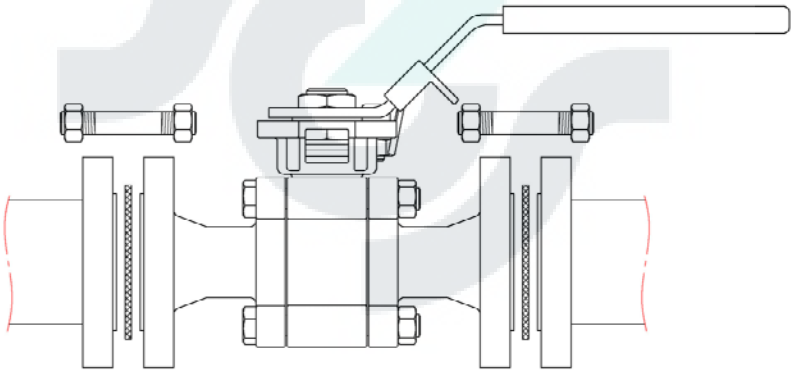

(Figure 3)

5. Maintenance and Normal Trouble

Most ball valve problems are caused by incorrect installation of the valve or incorrectly installed parts, but causes of ball valve failure may also include:

No.	Problem	Cause Analysis	Solution
1	Valve leaks during installation	Improper transportation and lifting may result in valve damage.	Only transport the ball valve by suitable means, do not drop it.
2	Valve leaks during installation	Both ends of the valve are lacking blind flanges.	According to the requirements of pipeline design.
3	Valve leaks during installation	The valve is misaligned with the pipeline.	According to the plant and pipeline installation standards.

4	Leakage between the sealing surface	Dirty sealing surface or the sealing surface damaged.	Remove dirt or replace it.
5	Leakage at stem packing	Insufficient packing pressure or prolonged use can lead to damage to the packing material.	Tighten the bolts evenly to compact the packing or replace packing.

(Table 1)

6. Maintenance and Repair

	**OPENING THE VALVE UNDER PRESSURE CAN BE DEADLY. DISMANTLING THE VALVE MUST BE COOLED DOWN AND PRESSURE-FREE. HEAD PROTECTION, PROTECTION GLASSES AND SAFETY SHOES ARE MANDATORY.**

6.1 Caution ! Ball valve may be residual fluid in the ball cavity when closed.

If the valve has been used to control hazardous media, it must be decontaminated before disassembly. It is recommended that the following steps are taken for safe removal and reassembly.

- Relieve the line pressure.
- Place valve in half-open position and flush the line to remove any hazardous material from the valve.
- All persons involved in the removal and disassembly of the valve should wear the proper Protective clothing, such as face shield, gloves, etc.
- By removing all the body bolts except one, then loosening the remaining bolt, the valve body can be swung out. Seats, gaskets and ball can be replaced without disturbing pipe alignment.
- On threaded lines, valve can be screwed on without the use of unions, as the three-piece construction makes valve ends free, by removing the bolts.

6.2 Tightening Sequence and Torque

The tightening sequence for all possible number of bolting is beyond the scope of this manual. The logic to be followed is as follows.

- Tighten the first four nuts in the sequence shown in Figure 4 to correctly position the part, then tighten the other bolts in the same sequence.
- The sequence goes clockwise around the bolt.
- Ensure that the recommended torque is maintained in all bolting. (Refer Table 2~7)

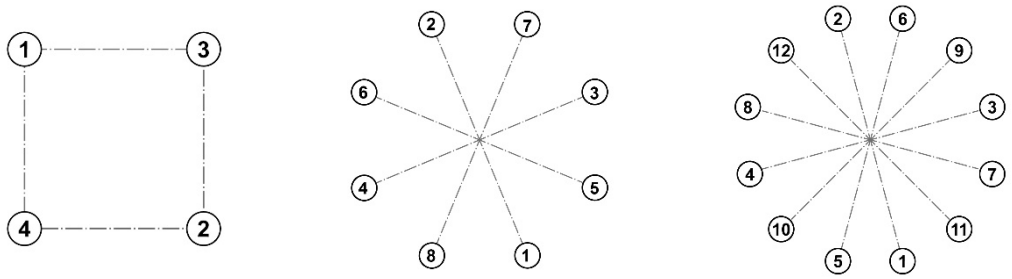

(Figure 4)

6.3 Tightening Torque values

— Series S300 / S600 / S603 / S320

Size	Threads	lbf-in	kgf-cm	N-m	Threads	lbf-in	kgf-cm	N-m
1/4"	1/4"-20UNC	87 ~ 95	100 ~ 110	9.8 ~ 10.8	M6	87 ~ 95	100 ~ 110	9.8 ~ 10.8
3/8"	1/4"-20UNC	87 ~ 95	100 ~ 110	9.8 ~ 10.8	M6	87 ~ 95	100 ~ 110	9.8 ~ 10.8
1/2"	1/4"-20UNC	95 ~ 130	110 ~ 150	10.8 ~ 14.7	M6	95 ~ 130	110 ~ 150	10.8 ~ 14.7
3/4"	5/16"-18UNC	122 ~ 156	140 ~ 180	13.7 ~ 17.6	M8	122 ~ 156	140 ~ 180	13.7 ~ 17.6
1"	5/16"-18UNC	165 ~ 200	190 ~ 230	18.6 ~ 22.5	M8	165 ~ 200	190 ~ 230	18.6 ~ 22.5
1.1/4"	3/8"-16UNC	191 ~ 217	220 ~ 250	21.6 ~ 24.5	M10	191 ~ 217	220 ~ 250	21.6 ~ 24.5
1.1/2"	3/8"-16UNC	330 ~ 365	380 ~ 420	37.2 ~ 41.2	M10	330 ~ 365	380 ~ 420	37.2 ~ 41.2
2"	7/16"-14UNC	391 ~ 434	450 ~ 500	44.1 ~ 49	M12	391 ~ 434	450 ~ 500	44.1 ~ 49
2.1/2"	9/16"-12UNC	625 ~ 694	720 ~ 800	70.6 ~ 78.4	M14	625 ~ 694	720 ~ 800	70.6 ~ 78.4
3"	5/8"-11UNC	694 ~ 781	800 ~ 900	78.4 ~ 88.2	M16	694 ~ 781	800 ~ 900	78.4 ~ 88.2
4"	5/8"-11UNC	694 ~ 781	800 ~ 900	78.4 ~ 88.2	M16	694 ~ 781	800 ~ 900	78.4 ~ 88.2

(Table 2)

— Series S300 / S600 / S304 / S604

Size	Threads	lbf-in	kgf-cm	N-m
1/2"	M6	95 ~ 130	110 ~ 150	10.8 ~ 14.7
3/4"	M8	95 ~ 130	110 ~ 150	10.8 ~ 14.7
1"	M8	122 ~ 156	140 ~ 180	13.7 ~ 17.6
1.1/2"	M10	191 ~ 217	220 ~ 250	21.6 ~ 24.5
2"	M12	391 ~ 434	450 ~ 500	44.1 ~ 49.0
2.1/2"	M14	625 ~ 694	720 ~ 800	70.6 ~ 78.4
3"	M16	694 ~ 781	800 ~ 900	78.4 ~ 88.2
4"	M16	694 ~ 781	800 ~ 900	78.4 ~ 88.2

(Table 3)

— Series S701 / S704 / S711 / S900 / S904

Size	Threads	lbf-in	kgf-cm	N-m	Threads	lbf-in	kgf-cm	N-m
1/4"	1/4"-20UNC	74 ~ 87	85 ~ 100	8.3 ~ 9.8	M6	74 ~ 87	85 ~ 100	8.3 ~ 9.8
3/8"	1/4"-20UNC	74 ~ 87	85 ~ 100	8.3 ~ 9.8	M6	74 ~ 87	85 ~ 100	8.3 ~ 9.8
1/2"	5/16"-18UNC	95 ~ 113	110 ~ 130	10.8 ~ 12.7	M8	95 ~ 113	110 ~ 130	10.8 ~ 12.7
3/4"	5/16"-18UNC	104 ~ 122	120 ~ 140	11.8 ~ 13.7	M8	104 ~ 122	120 ~ 140	11.8 ~ 13.7
1"	5/16"-18UNC	113 ~ 139	130 ~ 160	12.7 ~ 15.7	M8	113 ~ 139	130 ~ 160	12.7 ~ 15.7
1.1/4"	3/8"-16UNC	174 ~ 217	200 ~ 250	19.6 ~ 24.5	M10	174 ~ 217	200 ~ 250	19.6 ~ 24.5
1.1/2"	7/16"-14UNC	286 ~ 312	330 ~ 360	32.3 ~ 35.3	M10	286 ~ 312	330 ~ 360	32.3 ~ 35.3
2"	7/16"-14UNC	391 ~ 434	450 ~ 500	44.1 ~ 49	M12	391 ~ 434	450 ~ 500	44.1 ~ 49
2.1/2"	N/A	N/A	N/A	N/A	M14	625 ~ 694	720 ~ 800	70.6 ~ 78.4

3"	N/A	N/A	N/A	N/A	M16	694 ~ 781	800 ~ 900	78.4 ~ 88.2
4"	N/A	N/A	N/A	N/A	M16	694 ~ 781	800 ~ 900	78.4 ~ 88.2

(Table 4)

— Series S400

		Standard			NACE		
Size	**Threads**	**lbf-in**	**kgf-cm**	**N-m**	**lbf-in**	**kgf-cm**	**N-m**
1/4"	1/4"-28UNF	78 ~ 95	90 ~ 110	8.8 ~ 10.8	61 ~ 69	70 ~ 80	6.9 ~ 7.8
3/8"	1/4"-28UNF	78 ~ 95	90 ~ 110	8.8 ~ 10.8	61 ~ 69	70 ~ 80	6.9 ~ 7.8
1/2"	1/4"-28UNF	78 ~ 95	90 ~ 110	8.8 ~ 10.8	61 ~ 69	70 ~ 80	6.9 ~ 7.8
3/4"	5/16"-24UNF	104 ~ 122	120 ~ 140	11.8 ~ 13.7	104 ~ 122	120 ~ 140	11.8 ~ 13.7
1"	3/8"-24UNF	165 ~ 200	190 ~ 230	18.6 ~ 22.5	165 ~ 174	190 ~ 200	18.6 ~ 19.6
1.1/4"	7/16"-20UNF	191 ~ 217	220 ~ 250	21.6 ~ 24.5	191 ~ 200	220 ~ 230	21.6 ~ 22.5
1.1/2"	1/2"-20UNF	330 ~ 365	380 ~ 420	37.2 ~ 41.2	330 ~ 339	380 ~ 390	37.2 ~ 38.2
2"	7/16"-20UNF	391 ~ 399	450 ~ 460	44.1 ~ 45.1	391 ~ 399	450 ~ 460	44.1 ~ 45.1
2.1/2"	9/16"-18UNF	625 ~ 694	720 ~ 800	70.6 ~ 78.4	625 ~ 642	720 ~ 740	70.6 ~ 72.5
3"	5/8"-18UNF	694 ~ 781	800 ~ 900	78.4 ~ 88.2	694 ~ 712	800 ~ 820	78.4 ~ 80.4
4"	5/8"-18UNF	694 ~ 781	800 ~ 900	78.4 ~ 88.2	694 ~ 712	800 ~ 820	78.4 ~ 80.4

(Table 5)

— Series S531

Size	**Threads**	**lbf-in**	**kgf-cm**	**N-m**
1/4"	3/8"-16UNC	521 ~ 608	600 ~ 700	58.8 ~ 68.6
3/8"	3/8"-16UNC	521 ~ 608	600 ~ 700	58.8 ~ 68.6
1/2"	3/8"-16UNC	521 ~ 608	600 ~ 700	58.8 ~ 68.6
3/4"	3/8"-16UNC	521 ~ 608	600 ~ 700	58.8 ~ 68.6
1"	1/2"-13UNC	781 ~ 868	900 ~ 1000	88.2 ~ 98
1.1/4"	1/2"-13UNC	781 ~ 868	900 ~ 1000	88.2 ~ 98
1.1/2"	5/8"-11UNC	1042 ~ 1128	1200 ~ 1300	117.6 ~ 127.4

(Table 6)

— Series T801

Size	**Threads**	**lbf-in**	**kgf-cm**	**N-m**
1/4"	5/16"-18UNC	87 ~ 95	100 ~ 110	9.8 ~ 10.8
1/2"	5/16"-18UNC	95 ~ 130	110 ~ 150	10.8 ~ 14.7
3/4"	5/16"-18UNC	122 ~ 156	140 ~ 180	13.7 ~ 17.6
1"	5/16"-18UNC	165 ~ 200	190 ~ 230	18.6 ~ 22.5
1.1/2"	7/16"-14UNC	330 ~ 365	380 ~ 420	37.2. ~ 41.2
2"	M14	391 ~ 434	450 ~ 500	44.1 ~ 49
2.1/2”	M14	625 ~ 694	720 ~ 800	70.6 ~ 78.4

(Table 7)

7. Safety Notice

	**THE EQUIPMENT IS SUBJECT TO PRESSURE, RISK OF SEVERE INJURY OR DEATH. HANDLE CAREFULLY.**
	**DO NOT EXCEED THE MAXIMUM PERMISSIBLE PRESSURE.**

- Installation work must only be performed by trained personnel.
- Use appropriate protective gear as specified in plant operator's guidelines.
- Choose the installation location and suitable means, the ball valve cannot be used as a foothold or climbing aid.
- Do NOT apply external force to the ball valve.
- Inside diameter of the piping must correspond to the nominal diameter of the ball valve.
- When laying pipelines, it is essential to protect the ball valve body from lateral and bending forces, as well as the influence of vibrations and tension.
- Only mount the ball valve between matching aligned pipelines.
- Do NOT connect the system before valve pipeline installation to the earthing connection has been inspected, examined, and approved by the client.
- The pipeline should be free of any potentially explosive environments.
- Do NOT allow dust layers on the transportation media as it could charge the valve during high velocity of transportation. The flammable material shall be prohibited to be used on the valve.
- Use only in accordance with the specifications. (Refer Table 8, Table 9)
- Any servicing work and repairs not described in the installation, operating and maintenance instructions must not be performed without consulting the manufacturer first.

8. Transportation and Storage

- Transport the ball valve using appropriate methods; throwing or dropping is prohibited.
- Dispose of packaging materials in accordance with relevant local or national disposal regulations/environmental protection laws.

9. Appendix

— Pressure-Temperature Chart

Series S300

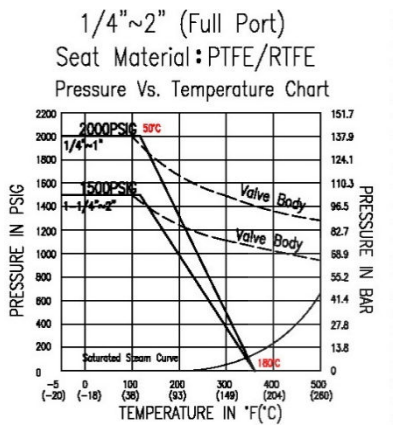

Series S303

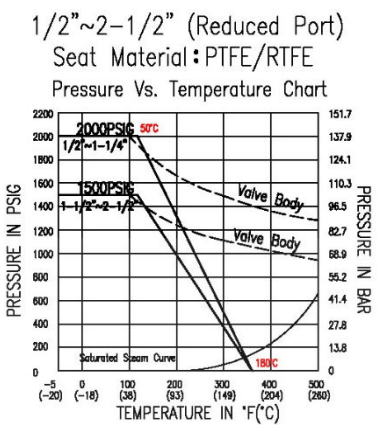

Series S304

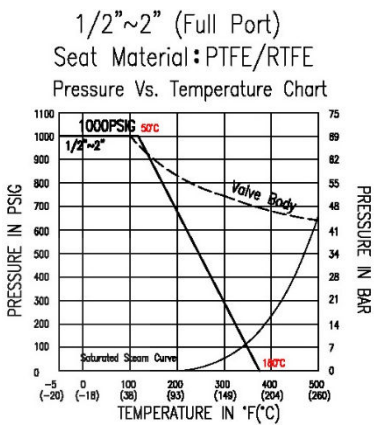

Series S305

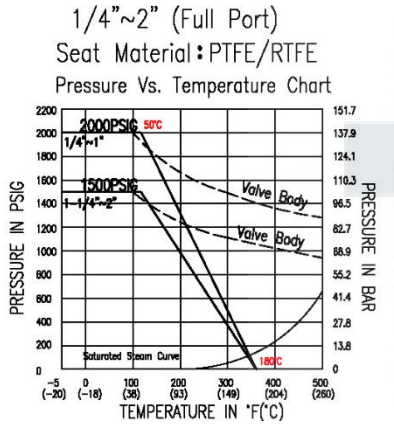

Series S320

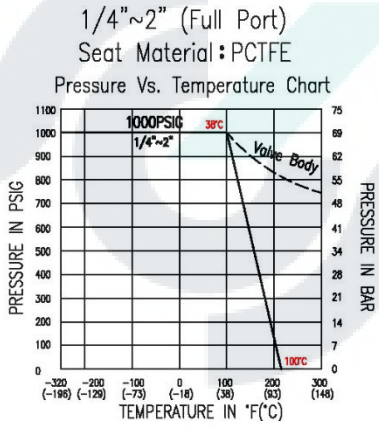

Series S400

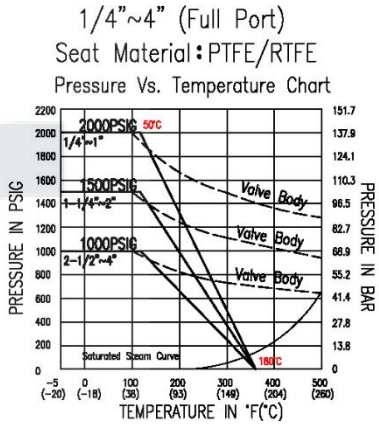

Series S600

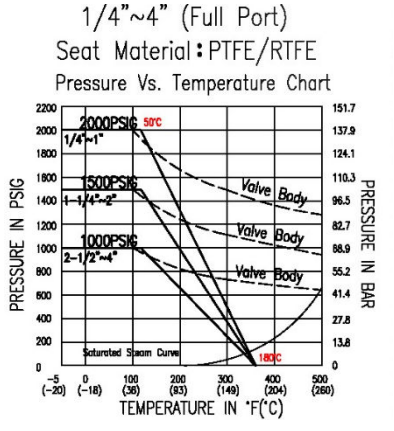

Series S603

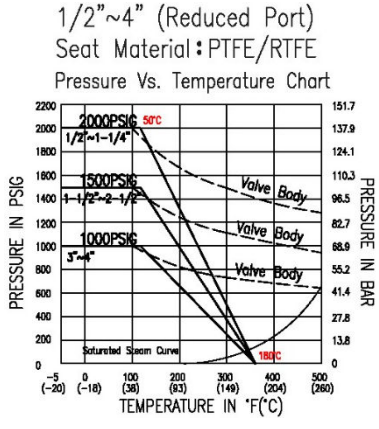

Series S604

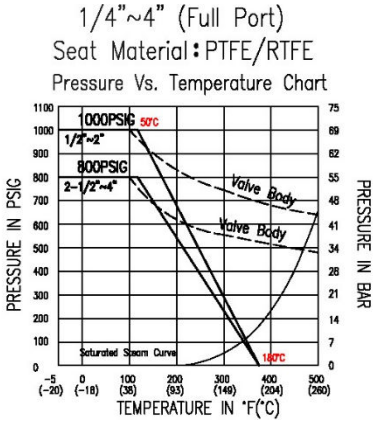

(Table 8)

Series S605

1/4"~4" (Full Port)
Seat Material : PTFE/RTFE
Pressure Vs. Temperature Chart

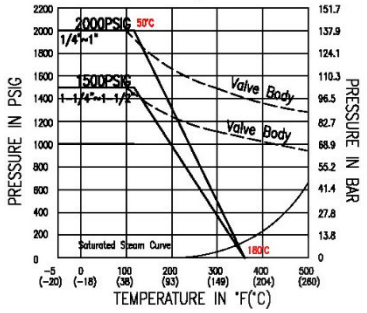

Series S701

1/4"~4" (Full Port)
Seat Material : PTFE/RTFE
Pressure Vs. Temperature Chart

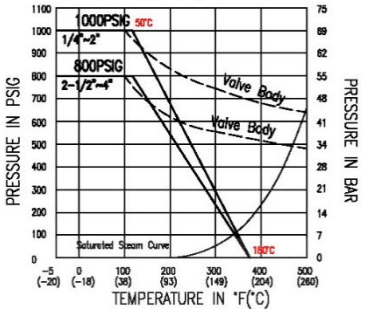

Series S704

1/4"~4" (Full Port)
Seat Material : PTFE/RTFE
Pressure Vs. Temperature Chart

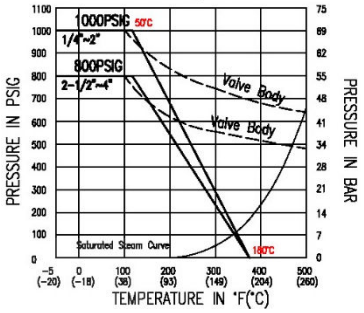

Series S711

1/4"~4" (Full Port)
Seat Material : PTFE/RTFE
Pressure Vs. Temperature Chart

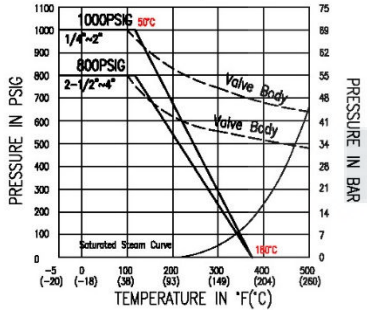

Series S802

2"~4" (Full Port)
Seat Material : PTFE/RTFE
Pressure Vs. Temperature Chart

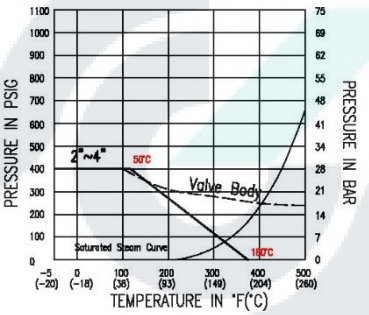

Series S900

1/4"~4" (Full Port)
Seat Material : PTFE/RTFE
Pressure Vs. Temperature Chart

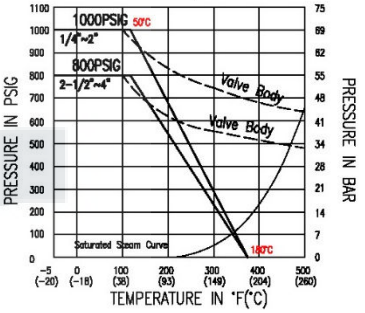

Series S904

1/4"~4" (Full Port)
Seat Material : PTFE/RTFE
Pressure Vs. Temperature Chart

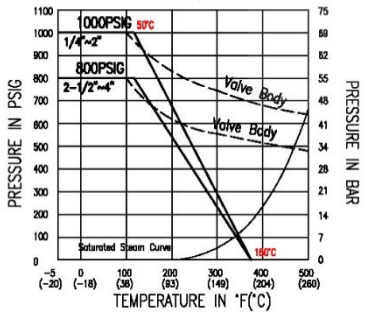

Series T531

1/4"~2" (Full Port)
Seat Material : PEEK
Pressure Vs. Temrerature Chart

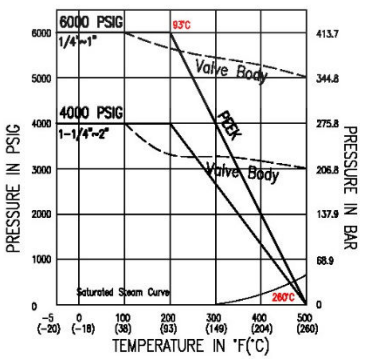

Series T801

1/4"~2-1/2" (Full Port)
Seat Material : PTFE/RTFE
Pressure Vs. Temperature Chart

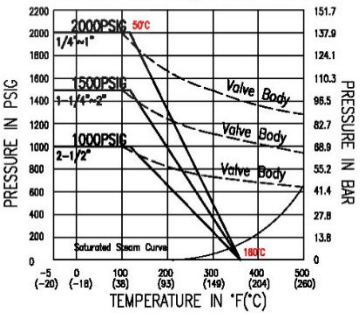

(Table 9)