TAWD
TRANSWORLD STEEL





SERIES S900

Three-Piece Ball Valve

V2.0

INTRODUCTION

The Series S900 is a direct-mount, three-piece, full-bore ball valve designed to provide a reliable and cost-effective solution for flow shut-off in industrial applications. Ideal for use with liquids, gases, vapors, and oils, it features a swing-out design that simplifies in-line maintenance, allowing efficient replacement of body seals without full disassembly. Additionally, live-loaded stem packing enhances durability and ensures consistent performance by compensating for wear and pressure fluctuations.

TECHNICAL SUMMARY

SIZE RANGE	FULL PORT 1/4" ~ 4" (DN 8 TO 100)
PRESSURE RATING	1/4" ~ 2" 1000 WOG 2-1/2" ~ 4" 800 WOG
END CONNECTIONS	Threaded, Butt Weld, Socket Weld, Flanged, Tube Butt Weld
VALVE TYPE	Full Bore
BODY & END CAP MATERIAL (ASTM)	CF8M, CF3M, CF8, CF3, WCB
BODY & END CAP MATERIAL (EN)	1.4408, 1.4409, 1.4308, 1.4309, 1.0619
SEAT MATERIAL	PTFE, RTFE, CTFE, TFM1600, MG1241, STFE
HANDLE TYPE	Flat, Oval, Cast, T-Bar, Spring Return Safety (SRS) Handle
V-PORT OPTION	Yes

STANDARD OF COMPLIANCE

MATERIAL CERTIFICATION	EN 10204-3.1
THREADED END CONNECTIONS	NPT ASME B1.20.1 BSPP ISO 228-1 BSPT ISO 7-1 DIN 2999
SOCKET WELD END CONNECTIONS	ASME B16.11
BUTT WELD END CONNECTIONS	ASME B16.25
FLANGED END CONNECTIONS	EN 1092-1 PN 16 / PN 40 ASME B16.5 CLASS 150
PRESSURE TESTING	API 598
MOUNTING PAD	ISO 5211
MARKING	ISO 5209
CE APPROVAL	2014 / 68 / EU Module H
QUALITY ASSURANCE	ISO 9001:2015

CONSTRUCTION-BILL OF MATERIAL

SERIES S900
1/4″ ~ 4″

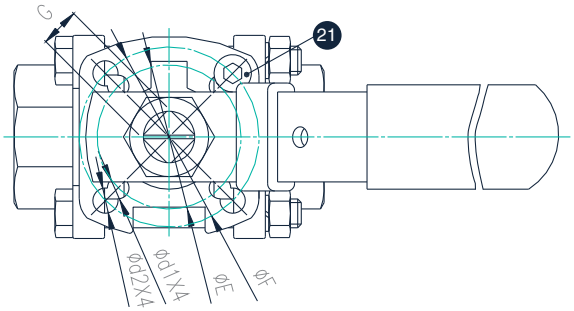

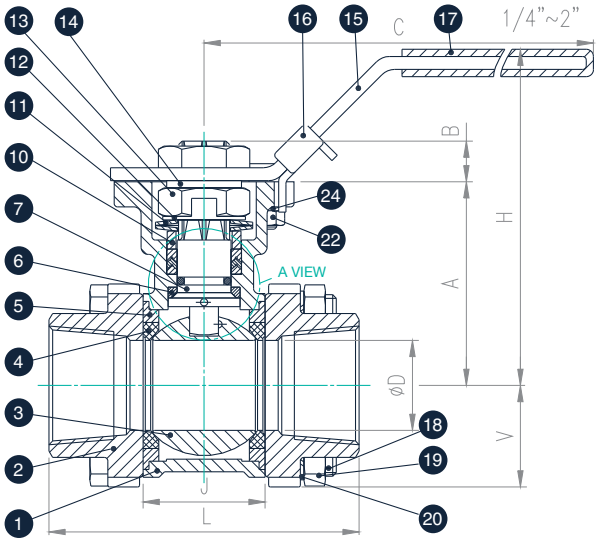

NO.	Parts	Material	Qty
1	Body	CF8M / WCB	1
2	End Cap	CF8M / WCB	2
3	Ball	SS316 / CF8M	1
4	Seat	RTFE	2
5	Joint Gasket	PTFE	2
6	Thrust Washer	RTFE	1
7	Stem	SS316	1
8	Gland Packing	PTFE	#
9	Gland Packing	25% GLASS FIBER FILED+PTFE	1
10	Gland Bush	SS304	1
11	Belleville Washer	SS301	2
12	Stop Washer	SS304	1
13	Stem Nut	SS304	2
14	Stem Washer	SS304	1
15	Handle	SS304	1
16	Locking Device	SS304	1
17	Handle Cover	VINYL	1
18	Bolt	SS304 / B7	⁎
19	Bolt Nut	SS304 / 2H	&
20	Blot Washer	SS304	&
21	Stop Pin	SS304	1
22	Pin Nut	SS304	1
23	O-Ring	VITON	1
24	Washer	SS304	1
25	Anti-static Device	SS316	@

For 1/4"~2" 2pcs, 2-1/2"~4" 3pcs
⁎ For 1/4"~2"- 4pcs of bolts (single ended external thread)
⁎ For 2-1/2"~3"- 4pcs of bolts (double ended external thread)
⁎ For 4"- 6pcs of bolts (double ended external thread)
& For 1/4"~1-1/2"- 4pcs
& For 2"- When body and end cap were CF8M, 4pcs @For 3/4"~4"- 2pcs
& For 2"- When body and end cap were WCB, 8pcs @For 3/4"~4"- 2pcs
& For 2-1/2"~3"- 8pcs
& For 4"- 12pcs
⁎& For 2"~4" - When body and end cap were CF8M, Bolts and Bolt Nuts are SS304.
⁎& For 2"~4" - When body and end cap were WCB, Bolts are B7, Bolt Nuts are 2H.

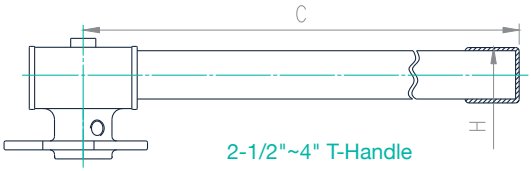

2-1/2"~4" T-Handle

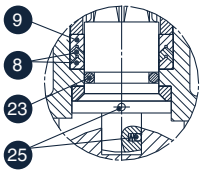

A VIEW

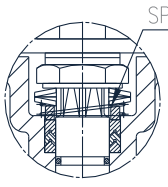

1/4" ~ 1/2" uses spring instead of anti-static device.

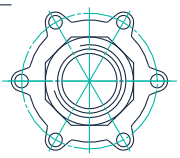

4”

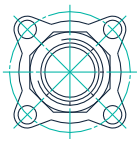

1/4”~3”

DIMENSIONS(mm)

SIZE	øD	A	B	C	øE	øF	G	L	H	J	V	ød1	ød2	ISO5211
1/4″	11.6	42.1	6.1	139	36	42	9	63.7	77	23.6	23.6	6	6	FOR F03 / F04
3/8″	12.7	42.1	6.1	139	36	42	9	63.7	77	23.6	23.6	6	6	FOR F03 / F04
1/2″	15	42.1	6.1	139	36	42	9	65.7	77	23.6	23.6	6	6	FOR F03 / F04
3/4″	20	48	6.6	139	36	42	9	76.2	83	28	28	6	6	FOR F03 / F04
1″	25	56.6	10.9	165	42	50	11	86.2	96	33.9	33.9	6	7	FOR F04 / F05
1-1/4″	32	60.9	10.9	165	42	50	11	102.8	100	42.5	42.5	6	7	FOR F04 / F05
1-1/2″	38	77.5	13.9	215	50	70	14	119.4	127	53.2	53.2	7.5	9	FOR F05 / F07
2″	50	85.2	13.9	215	50	70	14	131.4	134	64.6	64.6	7.5	9	FOR F05 / F07
2-1/2″	65	108.7	16.8	300	70	102	17	164	167	87	87	10	12	FOR F07 / F10
3″	80	117.1	17.8	370	70	102	17	182.7	176	99	99	10	12	FOR F07 / F10
4″	100	132.55	17.8	370	70	102	17	235.6	192	127	127	10	12	FOR F07 / F10

TECHNICAL DATA | Breakaway torque / Cv and Kv values / Weight

Size	Torque		Cv values	Kv values (M³/h)	Weight (Kg)
	N.m	lbs.in			
1/4″	7	62	7	6	0.63
3/8″	7	62	8	7	0.63
1/2″	7	62	15	13	0.67
3/4″	8	71	40	34	0.82
1″	14	124	70	60	1.29
1-1/4″	17	151	110	94	1.94
1-1/2″	27	239	250	213	3.19
2″	33	292	430	366	4.64
2-1/2″	56	496	700	595	9.51
3″	85	753	1100	935	12.80
4″	114	1010	2000	1700	21.84

TECHNICAL DATA | Pressure - Temperature diagram | 1/4″ ~ 4″

Full port
Seat material : PTFE / RTFE

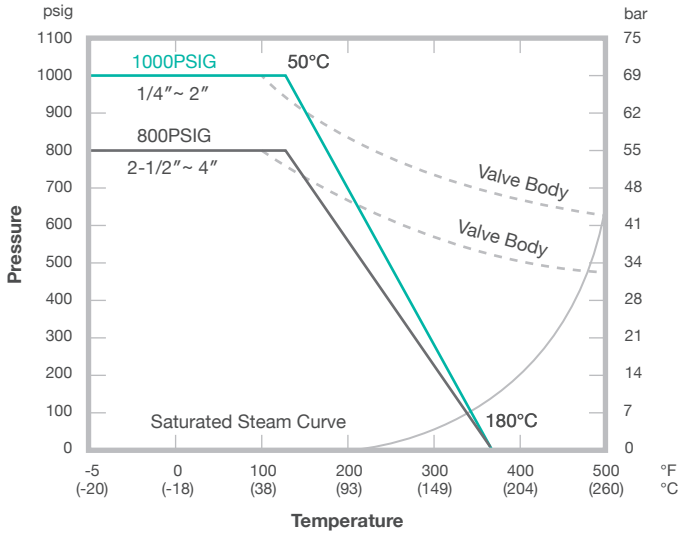

OPTIONAL ACCESSORIES

Handle Options



Oval Handle



Spring Return Sliding Lock



Economical Stem Extension



Spring Return Safety (SRS) Handle



T-Bar Handle



S.S Investment Casting Handle

V-Port Ball

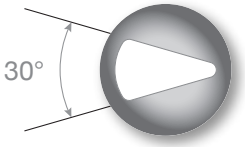

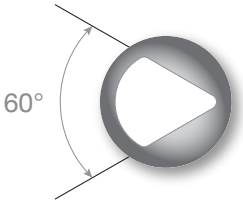

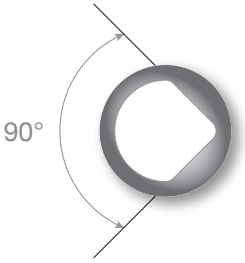

Accessories



TSM



TSM with Handle



Actuator

TAWD
TRANSWORLD STEEL

Transworld Steel Enterprise Co., Ltd.

Tel +886 4 2271 6107 ***Fax*** +886 4 2271 6127
Address No. 34, Gongye 14th Rd., Dali Dist.,
Taichung City, 412038, Taiwan (R.O.C.)

30th since 1992

Established in 1992
TAWD has dedicated over 30 years to manufacturing premium ball valves

INNOVATION ***INTEGRITY*** ***STRICT SELECTION***

Copyright © Jan. 2025 V2.0 TAWD