SIRCA INTERNATIONAL S.P.A.

New 301 restyling. Butterfly Valves Rubber Seated with Top Mounting ISO 5211

OUR PRODUCTION

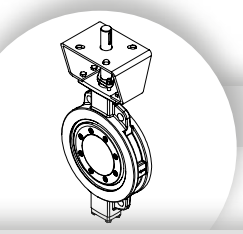

501M series - Triple Eccentric Metal Seated Butterfly Valves

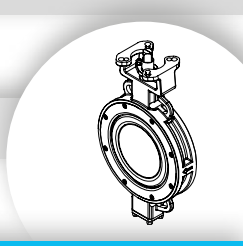

401N series and 401N-FS series - Double Eccentric Butterfly Valves

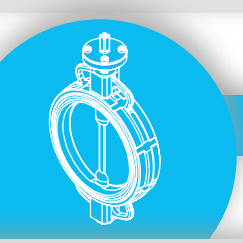

301/301E series - Butterfly Valves with rubber seat - ISO 5211

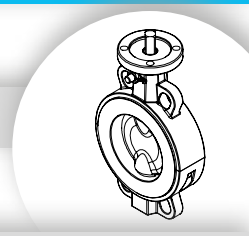

301TSS/301TT series - Butterfly Valves with PTFE lined

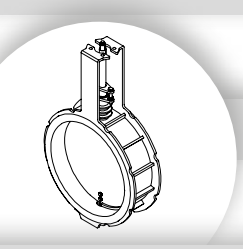

HT600 series - Damper Valves for high temperature

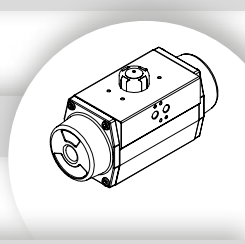

AP/APM series and AP040/210 series - Pneumatic Rotary Actuators

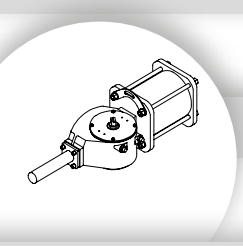

APG series - Scotch Yoke Pneumatic Actuators

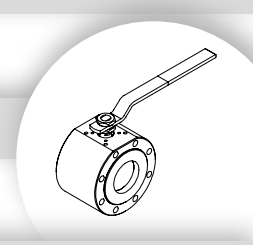

S10FS series - Wafer Flat Body Ball Valves

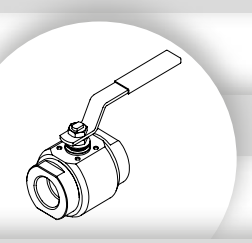

S20 series - Two-pieces 800 p.s.i. Ball Valves

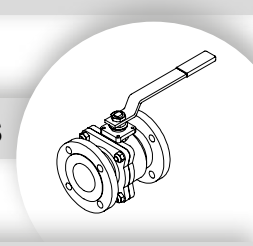

S30 series - Split Body Ball Valves / **S30T series** - Trunnion Ball Valves

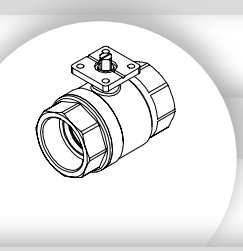

S40, S50, S60, S70, S80 series - Threaded actuated and manual ball valves

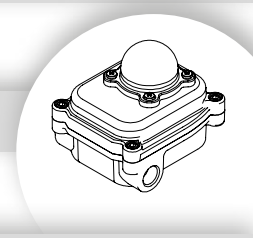

MBX series - Limit Switch Box

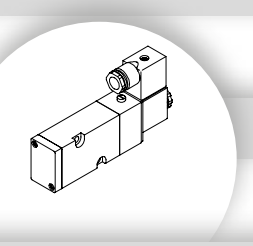

SOV series - Solenoid Valves 5/2 or 3/2 way

ACCESSORIES

SIRCA INTERNATIONAL S.P.A.

COMPANY PROFILE

Sirca International SpA was founded in the late seventies, and started doing business as a manufacturer of complete automation and pneumatic regulation systems.
Our flagship product is rotating pneumatic quarter-turn actuators which are compact, lightweight and highly reliable.

Subsequently, our company entered the Italian market with the production and sale of rubber-seated butterfly valves, double eccentric butterfly valves, ball valves and check valves.
In time at Sirca International we began marketing and producing accessories to actuate, control and regulate valves. These were installed on our own valves and actuators in order to offer our customers complete “assemblies” that are capable of meeting the most varied system requirements.

Beginning in the 1990s, our company began looking at foreign markets and in a short time we started exporting more than 60% of our production.
This type of market development requires continuous product innovation as well as continuous effort to maintain product competitiveness and quality.
With this motivation and these objectives, with the arrival of the new millenium we at Sirca International began designing and producing the triple eccentric butterfly valve metal-seated that are currently top of the range of the valves produced at Sirca.

The main strong points of Sirca International SpA lie in our product quality, competitive price, large warehouse stocks and in the reliability of our services. These confirm our status as a Leading Company on the national and international markets.

MACHINERY DEPARTMENT

Production site

Accuracy in producing valve and pneumatic actuator components is fundamental. And it is for this reason that at Sirca International we have a large stock of top-of-the-range CNC machines with CAD-CAM technology. Amongst the machine tools we use are automatic saws, twin-spindle lathes, with double/triple tower and horizontal machining centres.

Coordinate Measuring Machine.
CMM

Optical emission spectrometer.
PMI testing (Positive Material Identification)

Coating thickness gauges.
For coating thickness measurement on metals.

Hardness testing machine.
Metal and rubber materials.

Vertical idraulic test machine.
For butterfly and ball valves.

Leack test machine.
For pneumatic rotary actuators.

QUALITY & CONTROL

Construction features

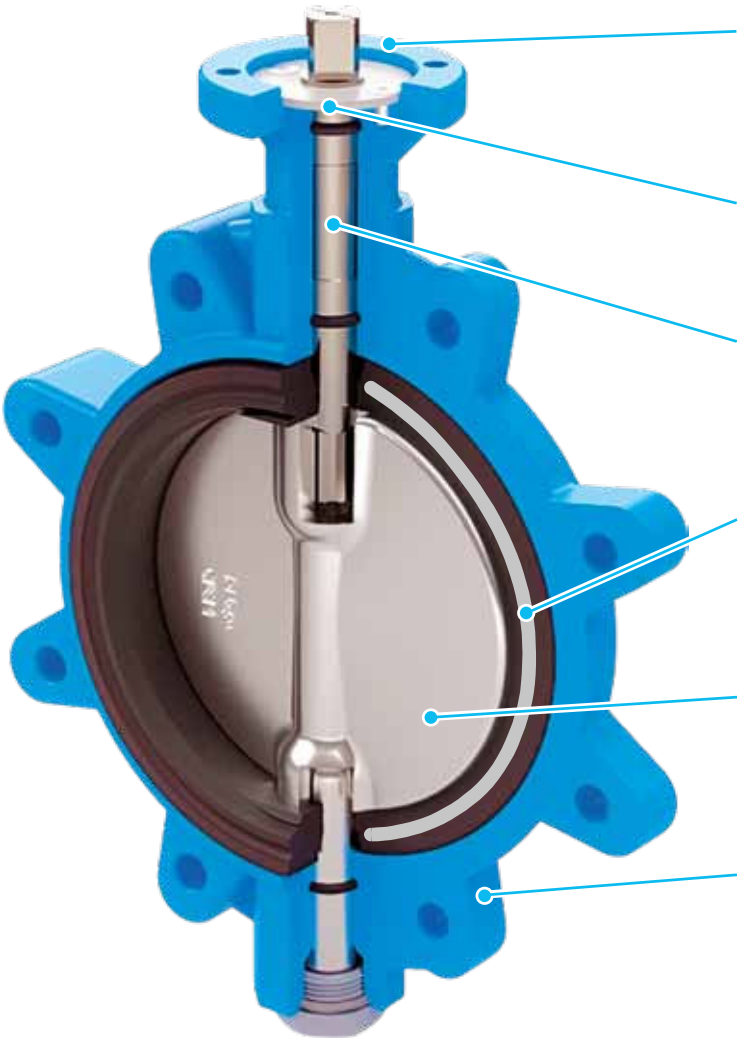

Top Mounting Connection
New Top Mounting Flange according to ISO 5211 with possibility of direct mounting pneumatic actuators, electric controls, etc.

Antiblow-out
New Integrated antiblow-out shaft system, according to API 609

Stem
The upper stem features a square connection made in accordance with ISO 5211. In addition, all stems have a milling refer to the position of the disc.

Seat
The inner metal ring inside it guarantees geometric and dimensional stability and allows to the valve to be used in low vacuum conditions.

Disc
The disc, made by casting, guarantees a large flow pass like this ensuring low pressure drops and minimal turbulence.

Body
One-piece valve body casting ensures high strenght with minimum weight. It can be supplied in a wide choice of materials, for both Wafer and Lug models, so as to meet all possible installation requirements.

Shape	Wafer and Lug type (on request Double FLanged)
Size Range	From 1.1/2” to 40” (from DN40 to DN1000)
Flow direction	Bidirectional
Design	EN12516-2, ASME B16.34, API609
Top mounting connection	Flange dimensions according to ISO 5211 Square stem connection according to ISO 5211
Flange drilling	PN6, PN10, PN16 according to UNI EN 1092-1 ANSI 150 according to ASME B16.5 Other on request.
Face to Face dimension	According to UNI EN 558-1 basic series 20
Working pressure	According to UNI EN 12516-1 and ASME B16.34 Max working pressure: 20 bar VACUUM CONDITIONS: Low Vacuum (from 1,013 bar to 0,033 bar)
Operating temeperature	Standard: -20 °C ÷ +160 °C (-4 °F ÷ +320 °F) depending on the body and gasket materials
Leakage class	NO leakage class, according to API598 / EN12266-1
Applications	Liquids or gases in industrial environments, plants, water treatment, Law vacuum, other applications with compatible materials and working conditions
Declarations	2014/68/UE “PED”; 2014/34/UE “ATEX”; IEC 61508 IEC 61511 “SIL”; EAC TR-CU 10, TR-CU 32

301 DN40-DN300 Ductile Iron & Alu/Bronze Configuration - Exploded view

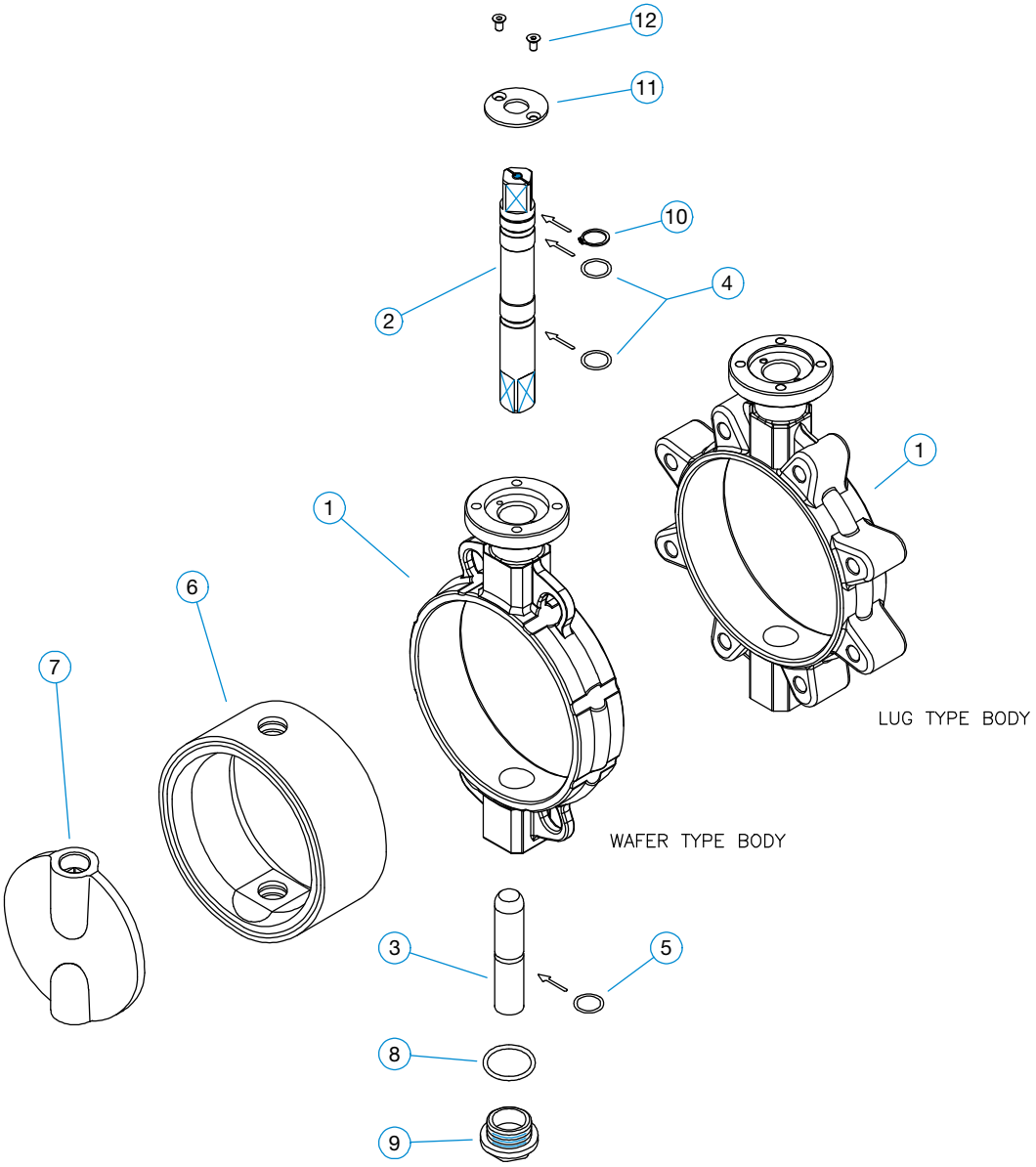

BOM - DUCTILE IRON CONFIGURATION			
ITEM	**DESCRIPTION**	**STANDARD MATERIALS**	**Q.TY**
1	**BODY**	EN GJS 400/15 (GGG40), Br/Al ASTM B148 gr. 95800	**1**
2	**UPPER STEM**	AISI 316, 416, 630, F51, Monel K500	**1**
3	**LOWER STEM**	AISI 316, 416, 630, F51, Monel K500	**1**
4*	**O-RING**	NBR, VITON	**2**
5*	**O-RING**	NBR, VITON	**1**
6*	**GASKET**	NBR, VITON, EPDM	**2**
7	**DISC**	EN GJS400/15 (GGG40) ASTM A216 gr. WCB ASTM A351 gr. CF8M Br/Al ASTM B148 gr. 95800 BUNA-N, EPDM, VITON Coated	**1**
8*	**O-RING**	NBR, VITON	**1**
9	**PLUG**	CARBON STEEL	**1**
10	**SEEGER**	CARBON STEEL+ENP	**1**
11	**ANTI BLOW OUT PLATE**	CARBON STEEL+ENP	**1**
12	**SCREW**	STAINLESS STEEL	**2**

* Suggested spare parts for ordinary maintenan
NOTE: Other materials are available on request.

301 Steel Configuration DN40-DN300 - Exploded view

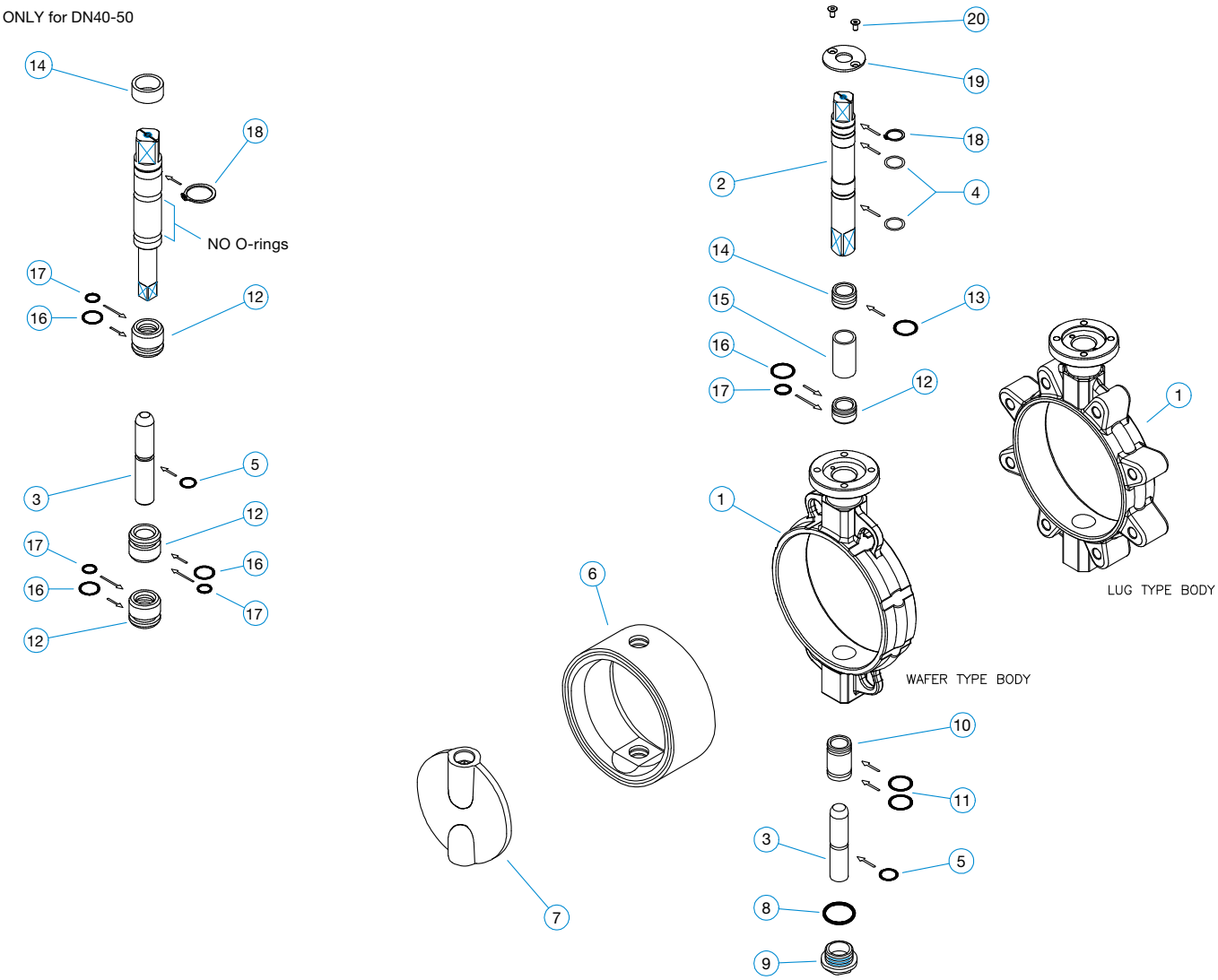

BOM - STEEL CONFIGURATION			
ITEM	**DESCRIPTION**	**STANDARD MATERIALS**	**Q.TY**
1	**BODY**	ASTM A216 gr. WCB ASTM A351 gr. CF8M	**1**
2	**UPPER STEM**	AISI 316, 416, 630	**1**
3	**LOWER STEM**	AISI 316, 416, 630	**1**
4*	**O-RING**	NBR, VITON	**2**
5*	**O-RING**	NBR, VITON	**1**
6*	**GASKET**	NBR, VITON, EPDM	**1**
7	**DISC**	EN GJS400/15 (GGG40) ASTM A216 gr. WCB ASTM A351 gr. CF8M Br/Al ASTM B148 gr. 9580 BUNA N, EPDM, VITON Coated RILSAN, HALARN Coated	**1**
8*	**O-RING**	NBR, VITON	**1**
9	**PLUG**	CARBON STEEL, STAINLESS STEEL	**1**
10	**LOWER BUSHING**	BRONZE	**1**
11*	**O-RING**	NBR, VITON	**2**
12	**UPPER BUSHING**	BRONZE	**1**
13*	**O-RING**	NBR, VITON	**1**
14	**UPPER BUSHING**	BRONZE	**1**
15	**SPACER**	CARBON STEEL + ENP	**1**
16*	**O-RING**	NBR, VITON	**1**
17*	**O-RING**	NBR, VITON	**1**
18	**SEEGER**	CARBON STEEL+ENP	**1**
19	**ANTI BLOW OUT PLATE**	AISI 316	**1**
20	**SCREW**	STAINLESS STEEL	**2**

* Suggested spare parts for ordinary maintenan

NOTE: Other materials are available on request.

301 DN350-DN600 - Exploded view

BOM			
ITEM	**DESCRIPTION**	**STANDARD MATERIALS**	**Q.TY**
1	**BODY**	EN GJS400/15 (GGG40) ASTM A216 gr. WCB ASTM A351 gr. CF8M Br/Al ASTM B148 gr. 95800	**1**
2*	**GASKET**	NBR, VIT ON, EPDM	**1**
3	**DISC**	EN GJS400/15 (GGG40) ASTM A216 gr. WCB ASTM A351 gr. CF8M Br/Al ASTM B148 gr. 95800 BUNA-N, EPDM, VITON Coated	**1**
4	**UPPER STEM**	AISI 316, 420, 416	**1**
5	**LOWER STEM**	AISI 316, 420, 416	**1**
6	**BUSHING**	BRONZE	**1**
7	**BUSHING**	CARBON STEEL + PTFE	**2**
8	**BUSHING**	CARBON STEEL + PTFE	**2**
9*	**O-RING**	NBR, VITON	**1**
10*	**O-RING**	NBR, VITON	**1**
11	**SCREW**	CARBON STEEL or STAINLESS STEEL	**2**
12*	**O-RING**	NBR, VITON	**1**
13*	**O-RING**	NBR, VITON	**1**
14	**PLUG**	CARBON STEEL or STAINLESS STEEL	**1**
15*	**O-RING**	NBR, VITON	**1**
16	**SCREW**	CARBON STEEL or STAINLESS STEEL	**1**
17	**KEY**	CARBON STEEL or STAINLESS STEEL	**2**

* Suggested spare parts for ordinary maintenan
NOTE: Other materials are available on request.

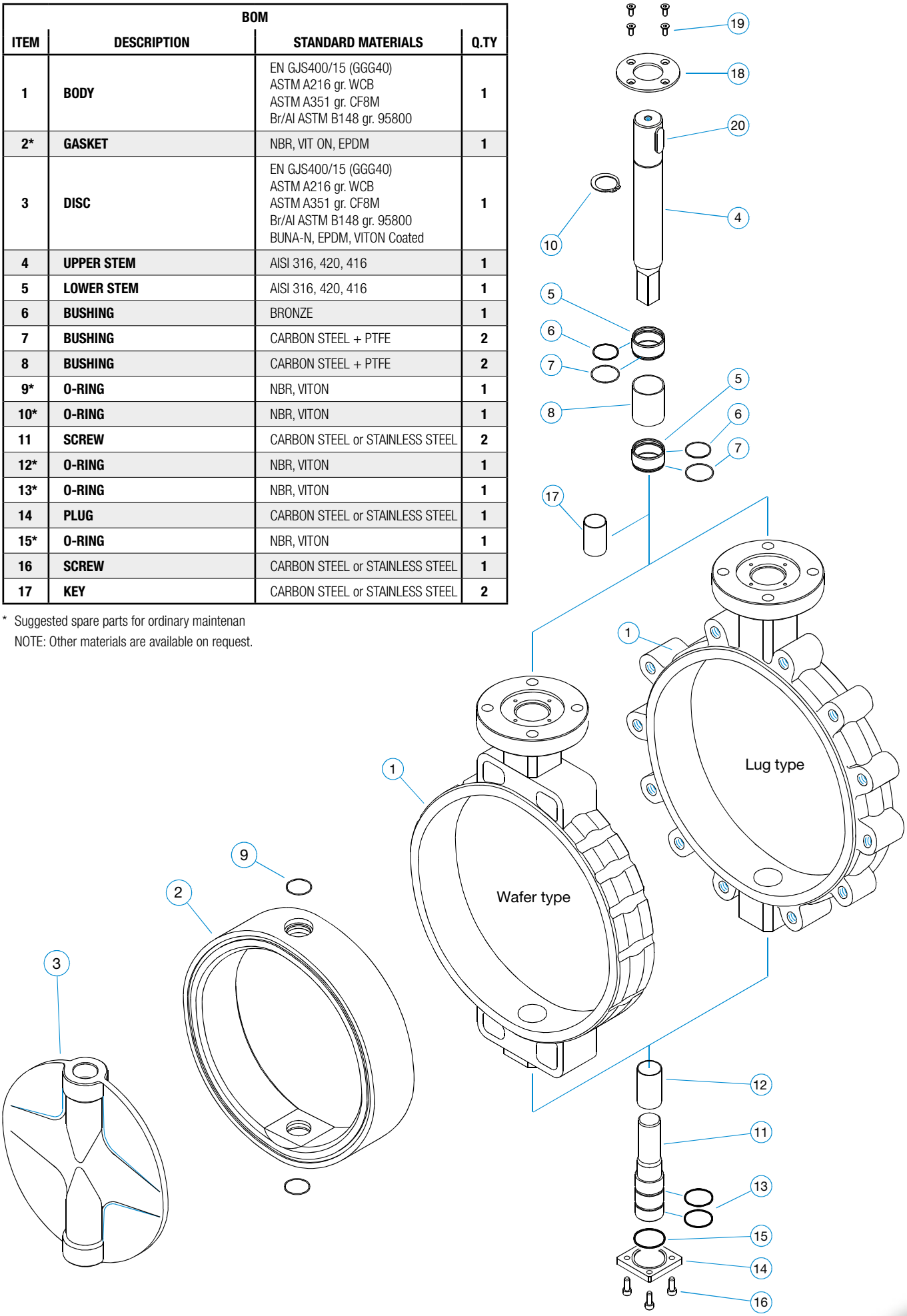

301 DN700-DN1000 - General Features

301 series butterfly valve was created to satisfy fluid interception and regulation applications in large diameter systems (DN700÷DN1000). Some advantages of this valve are the low weight which allows easy installation and low production cost, while maintaining high resistance and safety requirements. 301 series butterfly valves are bi-directional. The sealing gasket protrudes from the valve body ensuring a seal on pipeline flanges without the use of additional gaskets. These valves are available in Wafer, Lug and Flanged variations.

Wafer type has four blind threaded holes according to PN and ANSI flange standards.

Lug type has ears with blind threaded holes according to PN and ANSI flange standards. It allows the valve to be used as a foot valve at the end of a pipeline.

Flanged type has two flanges, at the ends, according to PN and ANSI flange standards.

All sizes of 301 series can be mounted on the flanges according to actual flanges norms, UNI EN 1092-1 for PN6-10-16 and ASME B16.47 series A for class ANSI150. The simple structure of the valve and the use of few components guarantee long life of the valve as well as reducing maintenance operations. The wide choice of materials available and the possibility of performing particular applications allow the use of the valve in the most varied working conditions.

Project Design

S301 valves are manufactured in diameters from DN700 up to DN1000. The valves have a perfect "bubble tight shut off" seal in every direction of the fluid at the maximum admissible rating pressure, max 10 bar.
The seat is made of vulcanized rubber material on a metal support that allows geometric stability and use in low vacuum conditions.
The disc has a slim profile to ensure low pressure drop and minimum turbulence.
The body and stems are always protected from the fluid, only the seat and the disc are in direct contact with the fluid.
Large diameter S301 valves can be automated with different types of actuators: pneumatic, electric, hydraulic or with handwheel and gear devices.
The body is coated with epoxy paint to protect the valve from corrosion and to make it suitable for installation in marine environments.
The valve is self-cleaning and has a double tightening on the shafts. The casting one-pieces can be supplied in different materials in Wafer, Lug and Flanged application.

Technical Features

The rounded profile of the Disc and the particular shape of the Seat allow to obtain a low torque during the closing action and guarantee a perfect bubble seal. The high resistance shafts enter in the discs for 2/3 of the diameter of the disc.
The shafts are driven by PTFE coated bushings that guarantee a low torque as well as a linear movement of the disc. In the upper part a bushing with internal and external o-rings prevents dust and/or liquids from entering the body or coming into contact with the shafts.
The shafts are fixed on the discs with special screws. The large diameter 301 series butterfly valves have a cap with o-ring in the lower part that blocks the shaft and eliminates leaks to the outside.

301 DN700-DN1000 - Exploded view

BOM			
ITEM	**DESCRIPTION**	**STANDARD MATERIALS**	**Q.TY**
1	**BODY**	EN GJS400/15 (GGG40) ASTM A216 gr. WCB ASTM A351 gr. CF8M Br/Al ASTM B148 gr. 95800	**1**
2*	**GASKET**	NBR, VITON, EPDM	**1**
3	**DISC**	EN GJS400/15 (GGG40) ASTM A216 gr. WCB ASTM A351 gr. CF8M Br/Al ASTM B148 gr. 95800 BUNA-N, EPDM, VITON Coated	**1**
4	**UPPER STEM**	AISI 316, 420, 416	**1**
5	**LOWER STEM**	AISI 316, 420, 416	**1**
6	**BUSHING**	BRONZE	**1**
7	**BUSHING**	CARBON STEEL + PTFE	**2**
8	**BUSHING**	CARBON STEEL + PTFE	**2**
9*	**O-RING**	NBR, VITON	**1**
10*	**O-RING**	NBR, VITON	**1**
11	**SCREW**	CARBON STEEL or STAINLESS STEEL	**3**
12*	**O-RING**	NBR, VITON	**3**
13*	**O-RING**	NBR, VITON	**2**
14	**PLUG**	CARBON STEEL or STAINLESS STEEL	**1**
15*	**O-RING**	NBR, VITON	**1**
16	**SCREW**	CARBON STEEL or STAINLESS STEEL	**4**
17	**KEY**	CARBON STEEL or STAINLESS STEEL	**2**

* Suggested spare parts for ordinary maintenan
NOTE: Other materials are availab le on request.

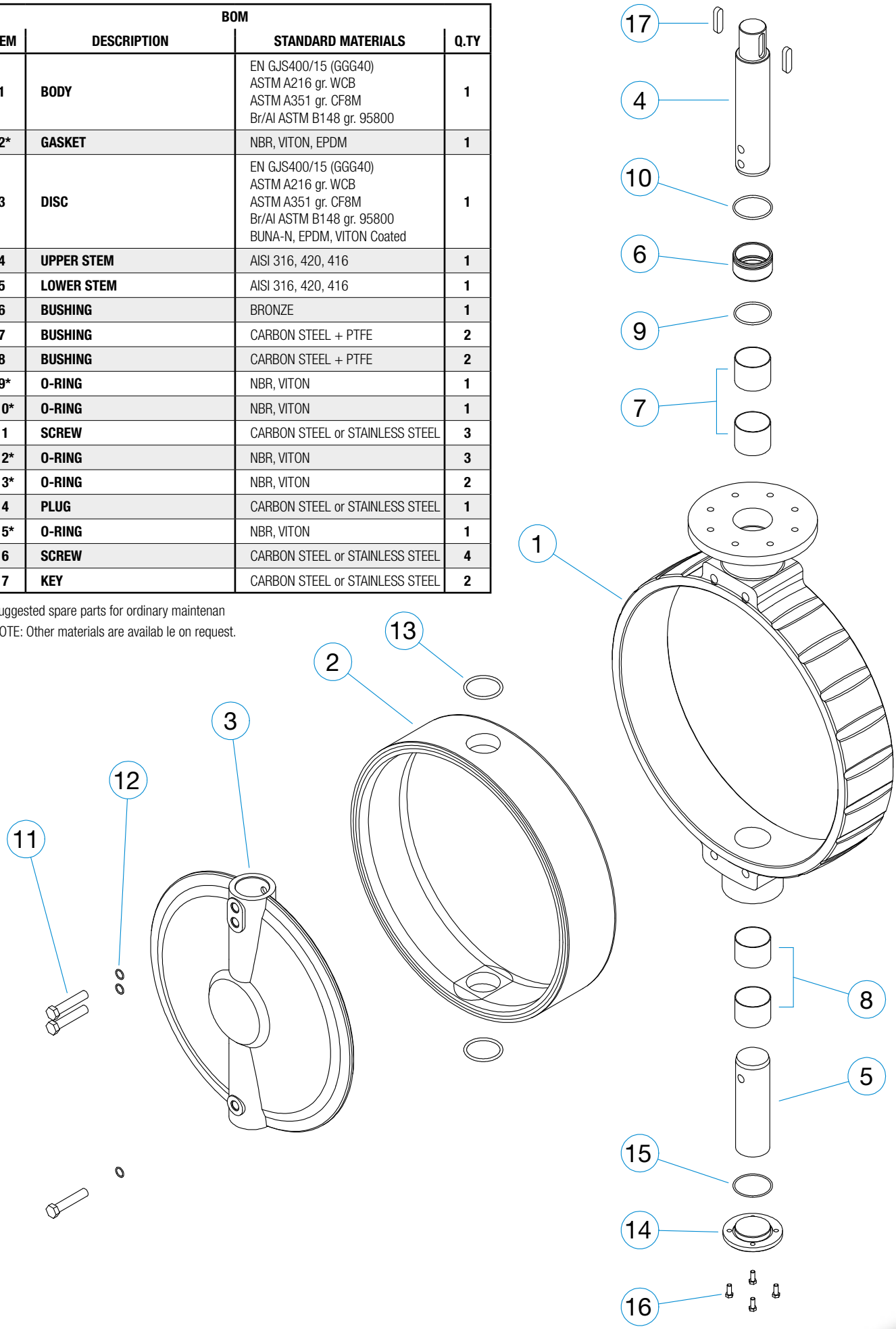

Overall dimensions from DN40 to DN300

Wafer type

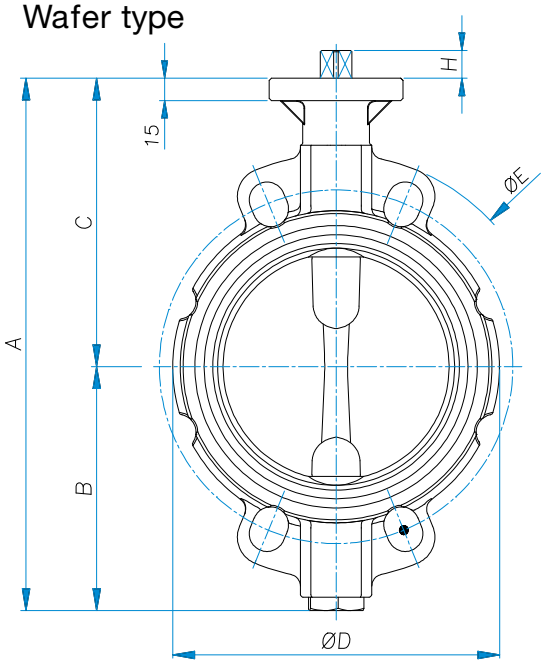

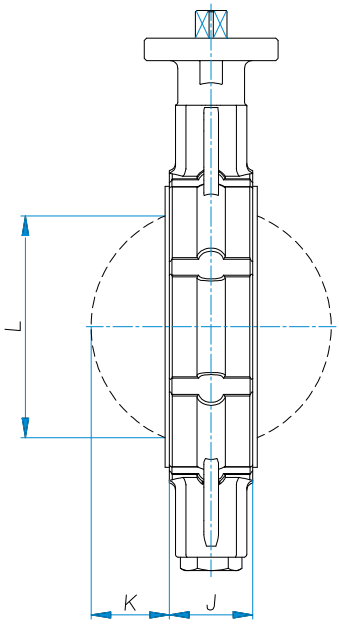

Lug type

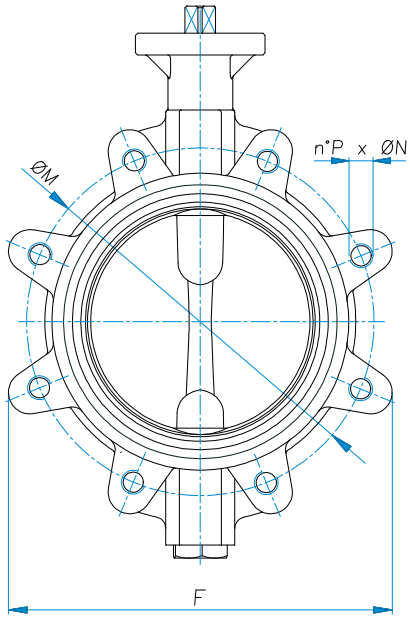

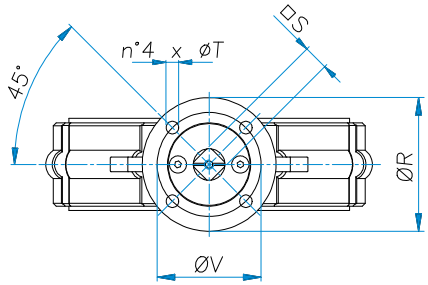

Weights (kg)

DN	mm	40	50	65	80	100	125	150	200	250	300
	inc	1.1/2”	2”	2.1/2”	3”	4”	5”	6”	8”	10”	12”
kg	Wafer	2,2	2,9	3,9	4,2	5,0	7,4	8,5	11,8	18,5	29,8
	Lug	2,6	3,5	4,9	5,4	7,0	10,0	11,1	17,0	27,4	40,4

DN	A	B	C	ØD	ØE	F	J**	K	L	ØM				ØN				P				ØR	□S	H	ØT	ØV	ISO 5211
										PN6	PN10	PN16	A150	PNG	PN10	PN16	A150***	PN6	PN10	PN16	A150						
40	188	90	98	90	145	111	34	6,6	31	100	110	110	98,6	M12	M16	M16	1/2” UNC	4	4	4	4	65	11	12	7	50	F05
50	205	96	109	103	160	120	43,5	7,2	36	110	125	125	120,6	M12	M16	M16	5/8” UNC	4	4	4	4	65	11	12	7	50	F05
65	230	108	122	122	180	138	46	13	53	130	145	145	139,7	M12	M16	M16	5/8” UNC	4	8	8	4	90	14	16	9	70	F07
80	250	118	132	140	198	150	46	19,3	69	150	160	160	152,4	M16	M16	M16	5/8” UNC	4	8	8	4	90	14	16	9	70	F07
100	285	132	153	162	230	213	52	27	90	170	180	180	190,5	M16	M16	M16	5/8” UNC	4	8	8	8	90	14	16	9	70	F07
125	327	150	177	200	256	243	56,5	36,4	115	200	210	210	215,9	M16	M16	M16	3/4” UNC	8	8	8	8	90	17	19	9	70	F07
150	359	165	194	220	286	267	56,5	48,6	142	225	240	240	241,3	M16	M20	M20	3/4” UNC	8	8	8	8	90	17	19	9	70	F07
200	419	194	225	243	310	330	60	69,8	199	280	295	295	298,4	M16	M20	M20	3/4” UNC	8	8	12	8	125	17	19	11	102	F10
250	495	220	275	263	348	402	68	90	238	335	350	355	362,0	M16	M20	M24	7/8” UNC	12	12	12	12	150	22	24	13	125	F12
300	559	262	297	382	414	473	78	111	289	395	400	410	431,8	M20	M20	M24	7/8” UNC	12	12	12	12	150	22	24	13	125	F12

*
Only for DN65 PN10-16, where steel flange and consequently butterfly valve are required with 4 holes, these may be supplied by agreement between valve manufacturer and purchaser.

**
J dimension according to UNI EN 558, basic series 20.
L is the measurement of the disc chord, in full opening position.

***
For flanges ASME B16.5 class ANSI 150 thread according to ANSI B1.1 type UNC
On request, holes with metric thread for flanges ASME B16.5 class ANSI 150

Overall dimensions from DN600 to DN1000

Wafer type

Lug type

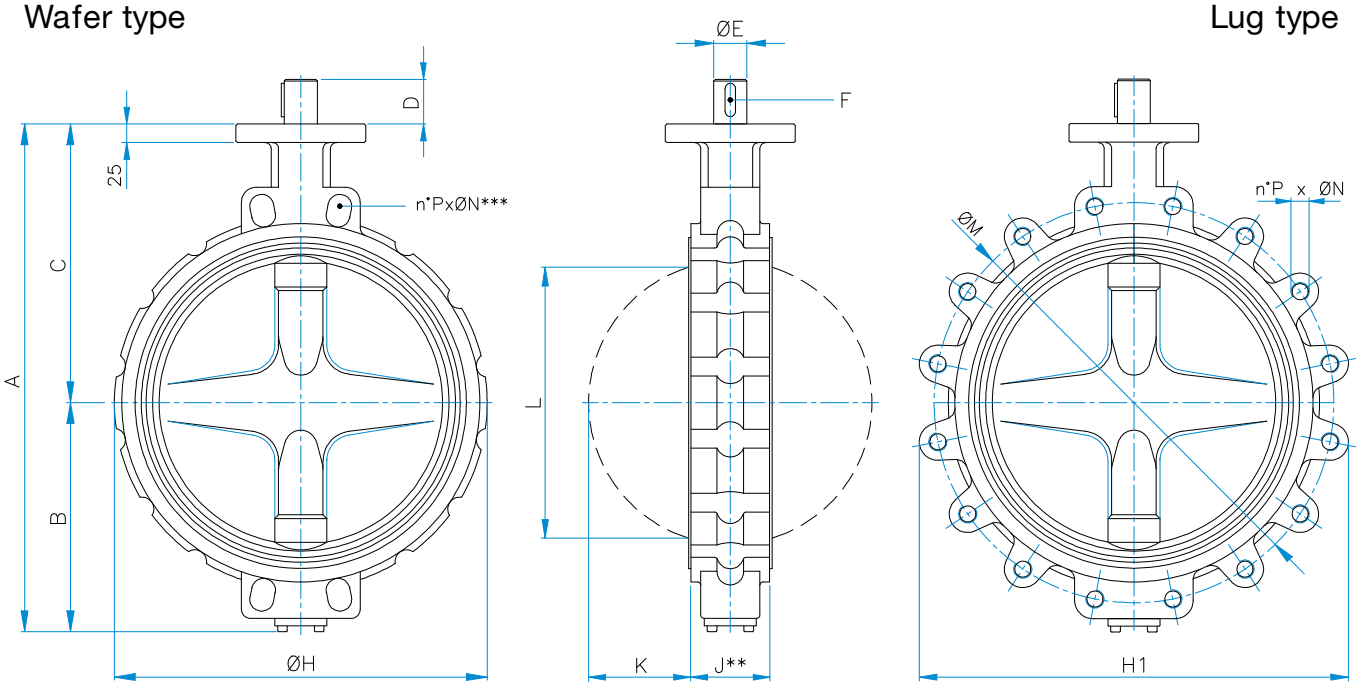

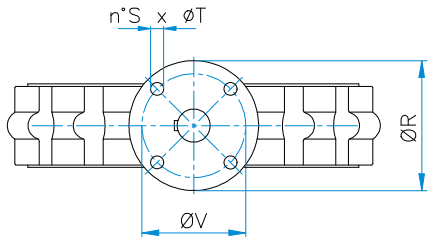

Weights (kg)

DN	mm	350	400	450	500	600	700	750	800	900	1000
	inc	14”	16”	18”	20”	24”	28”	30”	32”	36”	40”
kg	Wafer	50	70	90	110	210	250	315	365	440	575
	Lug	60	90	110	150	270	350	415	465	530	672

DN	A	B	C	D	ØE	F	ØH	H1	J**	K	L	ØM				ØN				P				ØR	S	ØT	ØV
												PN6	PN10	PN16	A150	PNG	PN10	PN16	A150***	PN6	PN10	PN16	A150				
350	632	281	351	60	44,5	14x9x45	436	516	78	126	324	445	460	470	476,2	M20	M20	M24	1” UNC	12	16	16	12	175	4	18	140
400	681	305,5	375,5	60	44,5		483	590	102	138	367	495	515	525	539,8	M20	M24	M27	1” UNC	16	16	16	16	175	4	18	140
450	749	349	400	60	44,5		540	644	114	157	417	550	565	585	577,8	M20	M24	M27	1.1/8”- 8UN	16	20	20	16	175	4	18	140
500	798	373	425	60	44,5		580	715	127	179	468	600	620	650	635,0	M20	M24	M30	1.1/8”- 8UN	20	20	20	20	175	4	18	140
600	936	445	491	90	63	18x11 x80	710	830	153	218	572	705	725	770	749,3	M24	M27	M33	1.1/4”- 8UN	20	20	20	20	210	4	22	165
700	1120	540	580	90	75	n°2-22x14x80	792	910	165	261	666	810	840	840	863,6	M24	M27	M33	1.1/4”- 8UN	24	24	24	28	300	8	18	254
750	1195	585	610	90	75		860	970	190	279	719	//	//	//	914,4	//	//	//	1.1/4”- 8UN	//	//	//	28	300	8	18	254
800	1242	612	630	90	75		825	1040	190	304	774	920	950	950	977,9	M27	M30	M36	1.1/2”- 8UN	24	24	24	28	360	8	18	254
900	1350	660	690	120	95	n°2-25x14 x110	1008	1150	203	339	858	1020	1050	1050	1085,9	M27	M30	M36	1.1/2”- 8UN	24	28	28	32	360	8	22	298
1000	1500	740	760	120	95		1135	1260	216	383	957	1120	1160	1170	1200,2	M27	M33	M39	1.1/2”- 8UN	28	28	28	36	415	8	22	298

**
J dimension according to UNI EN 558, basic series 20.L is the measurement of the disc chord, in full opening position.

***
For butterfly valves wafer type, from Dn700 to DN1000 the body has only four dead threaded holes on each side.

****
From DN350 to DN600 flange drilling according to ASME B16.5 class ANSI 150.
From DN700 to DN1000 flange drilling according to ASME B16.47 series A class ANSI 150.
Thread according to ANSI B1.1 type UNC up to 1” included.
Thread according to ANSI B1.1 type 8-UN over 1” excluded.
On request, holes with metric thread for flanges ASME B16.5/B16.47 class ANSI 150

Torque values (Nm)

Δ^P (bar)	SIZE (mm/inch)																			
	40	50	65	80	100	125	150	200	250	300	350	400	450	500	600	700	750	800	900	1000
	1 1/2"	2"	2 1/2"	3"	4"	5"	6"	8"	10"	12"	14"	16"	18"	20"	24"	28"	30"	32"	36"	40"
0	11	12	28	35	38	64	70	85	180	325	400	515	840	1150	2130	2403	2785	3329	5067	6496
3	12	13	29	42	45	78	80	110	190	400	460	680	925	1355	2300	2606	3018	3608	5491	7040
6	13	14	30	48	51	82	84	125	260	472	600	775	1100	1490	2685	2880	3430	4100	6240	8000
10	14	18	34	50	54	94	100	140	300	570	750	920	1320	1690	3200	4800	5720	6940	10400	14540
16	17	23	38	59	60	108	119	200	370	715	900	1114	1545	1815	5420	//	//	//	//	//
20	18	25	46	67	69	138	145	275	450	820	1035	1340	1710	2210	5790	//	//	//	//	//

NOTE:
The table above gives the recommended maximum torque values to be applied to the SIRCA butterfly valves. They represent the sum of the amounts of the mechanical friction caused by opening and closing the valve in relation the various pressure drops. These to torque do NOT include the Safety Factor, besides these values apply to any type of application.

Cv values

Angle of opening	SIZE (mm/inch)																			
	40	50	65	80	100	125	150	200	250	300	350	400	450	500	600	700	750	800	900	1000
	1 1/2"	2"	2 1/2"	3"	4"	5"	6"	8"	10"	12"	14"	16"	18"	20"	24"	28"	30"	32"	36"	40"
90°	80	130	200	300	550	1125	1950	3250	5000	7500	10000	12500	17500	22000	28000	29100	33300	37880	47950	59200
80°	70	105	160	240	475	1000	1650	2725	4300	6050	8100	10800	14000	17500	24000	25317	28971	32956	41717	51504
70°	55	90	130	205	400	830	1350	2200	3600	5000	6700	9000	12000	15000	20500	22026	25205	28671	36293	44808
60°	45	70	105	160	305	625	1030	1750	2750	4050	5100	6500	9200	11500	16500	19162	21928	24944	31575	38983
50°	26	53	83	125	235	490	800	1300	2150	3100	4100	5100	7100	8700	11750	16671	19077	21701	27470	33916
40°	18	27	42	63	120	250	410	700	1150	1600	2200	2650	3700	4600	6100	14504	16597	18880	23899	29507
30°	11	17	26	38	73	155	250	420	670	1000	1300	1700	2300	2800	3800	12619	14440	16426	20792	25671
20°	5	9	15	22	42	88	145	250	390	550	750	900	1250	1600	2200	10978	12563	14290	18089	22333
10°	3	6	10	15	28	60	98	170	260	380	500	650	900	1125	1500	9551	10929	12433	15738	19430

Cv (pure number) gives the flow rate of water in U.S. gallons per minute passing through the valve, creating a pressure drop of 1 psi at a temperature of + 68° F (American units). In metric units this coefficient is defined as the Kv which likewise represents the flow rate in m3/h passing through the valve with a pressure drop of 1 bar at a temperature of 20° C. The relation between Cv and Kv expressed in the above units is a follows: Cv= 1.16 KV.

S301 ISO5211 with hand lever

S301 ISO5211 with handweel gear box

S301 ISO 5211 with penumatic actuators AP/PM series. Direct mounting

S301 ISO 5211 with disengangeable gear box and penumatic actuators AP040/210 series

S301 ISO5211 with 230V-50Hz one phase or 400V-50Hz three phases IP67 electric actuator

S301 ISO5211 with disengangeable gear box, penumatic actuators, limit switch box and pneumatic control group

CAT-S301-00-01/2025

SIRCA INTERNATIONAL S.P.A.

Via Trieste n° 8 - 20060 TREZZANO ROSA (MI - ITALY) - Phone ++39 02 92010204
Fax ++39 02 92010216 Purchase Dept. - Fax ++39 02 92011954 Sales Dept.
E-mail: info@sircainternational.com - web site: www.sircainternational.com