HQ Series Quarter-turn Electric Actuator

Installation, Operation & Maintenance Manual

Address : 26, Emtibeui 28-ro, Siheung-si, Gyeonggi-do, (15119) Republic of Korea
Tel : +82-31-488-8266, Fax : +82-31-488-8269, Home page : www.hkcon.co.kr, email : hkcon@hkcon.co.kr

Contents

1. Introduction 3
1.1. Purpose 3
1.2. Safety Notices 3
2. Product Identification 3
2.1. Product Identification 3
2.2. Initial Inspection 4
2.3. Storage 4
3. General Information and Features 5
3.1. General information 5
3.2. External Parts for Standard Models 7
3.3. Internal parts for standard model 7
4. Installation 7
4.1. Pre-installation 7
4.2. Actuator Mounting 8
4.3. Limit Switch Setting 9
4.4. Torque Switch Setting 9
4.5. Counter-Clockwise to Close Setting 9
4.6. Mechanical Travel Stop Adjustment 9
4.7. Setting Potentiometer (Replacement and Setting) 10
4.8. Current Position Transmitter – CPT (Optional) 10
4.9. Proportional Control Unit 11
4.10. [ac/dc Multi-board --- 16 Rev1] 17
5. [Apply for optional communication protocol 17
5.1. ProfiBus Controller (PBC) 17
5.2. ModBus Controller 18
6. Wiring 19
6.1. Electrical Connections and Preliminary Test 19
7. Maintenance 20
7.1. Maintenance 20
7.2. Tools 20
8. Trouble Shooting 20
8.1. The actuator does not respond 20
8.2. The actuator is supplied with power but does not operate 20
8.3. Actuator runs erratically 21
8.4. Optional Equipment(s) 21
9. Installation and Maintenance Tips 21
Appendix I: HQ series Coding System 22
Appendix II: Wiring Diagram 23
Appendix III: Grounding 26

1. Introduction

1.1. Purpose

The purpose of this manual is to introduce and explain the installation, operation and maintenance of HQ-series electric actuators. This IOM Manual is distributed as a hard copy when delivered the ordered products to customer.

1.2. Safety Notices

Safety notices in this manual outline precaution the user must take to reduce the risk of personal injury and damage to the equipment. The user(s) must read these instructions before the installation, operation or maintenance of HQ-series electric actuators.

DANGER: *Refers to personal safety and alerts the user to danger or harm. The hazard or unsafe practice will result in severe injury or death.*

WARNING: *Refers to personal safety. Alerts the user to potential danger. Failure to follow warning notices could result in personal injury or death.*

CAUTION: *Directs the user's attention to general precautions that, if not followed, could result in personal injury and/or equipment damage.*

Notes: *Highlighted information is critical to the user's understanding of the actuator's installation and operation.*

2. Product Identification

2.1. Product Identification

[The actuator name sticker is located on the opposite side of the cable entry. Stainless steel name plate for explosion proof types are attached on top of the cover. The name plate contains the following: -21 r0]

2.1.1. Marking

① [General
HQ logo (trade mark), Model, Electrical power supply, Type, Rated current, Torque, Serial No., Operating time (seconds) and Option. ------ 20 Rev0]

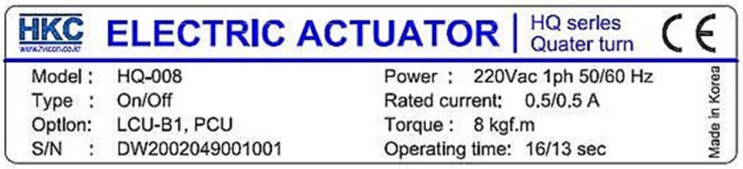

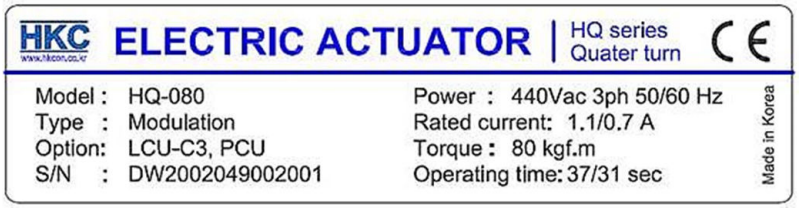

② [Flameproof for CSA, Flameproof & Dust Ignition Proof for IECEx/ATEX, KCs, CCC --- 21 rev2]

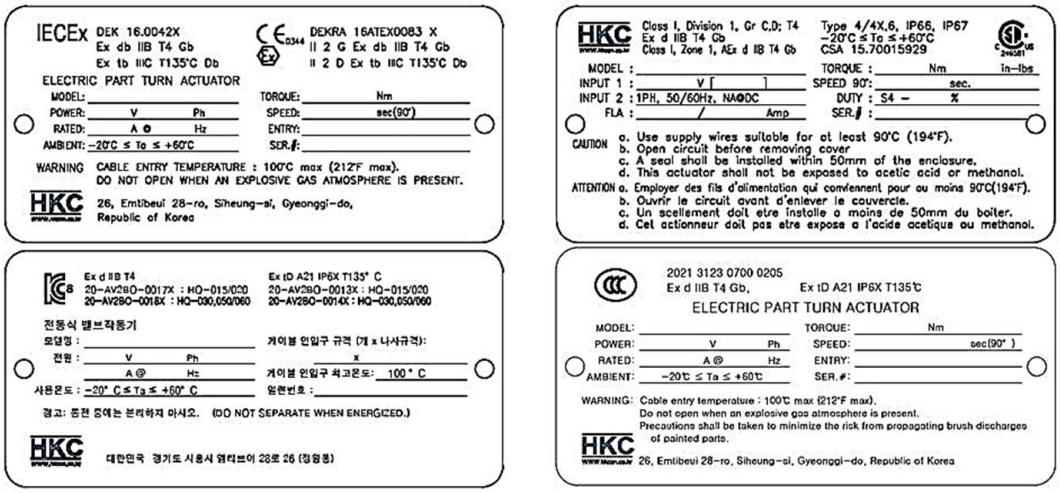

③ [Flameproof for CSA, and EAC ------ 18 Rev0]

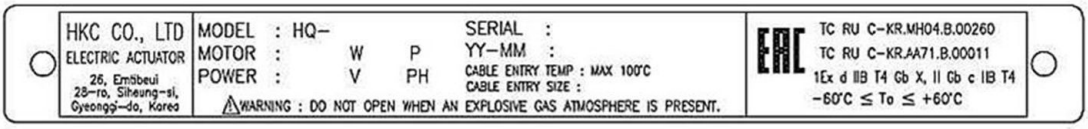

2.1.2. Applied Standard

① [IEC60079-0:2011(Ed.6 +IS01, EN60079-0:2012 +A11
② IEC60079-1:2014-06 (Ed.7), EN60079-1:2014
③ IEC60079-31:2013(Ed.2), EN60079-31:2014 ----- 17 Rev0]

2.1.3. Certification

① [IECEx: for HQ-008 ~ HQ-300 with LCU, IECEx DEK 16.0042X
Ex db IIB T4 Gb, Ta -20℃ to +60℃, Ex tb IIIC 135℃ Db
② ATEX: for HQ-008 ~ HQ-300 with LCU, DEKRA 16ATEX0083 X, CE 0344
II 2 G Ex db IIB T4 Gb, Ta -20℃ to +60℃, II 2 D Ex tb IIIC 135℃ Db ----- 18 Rev0]
③ [KCs Ex d IIB T4, -20℃ ~ +60℃:
for HQ-008/010, 제 2020-BO-0016 호, for HQ-015/020, 제 2020-BO-0017 호,
for HQ-030~060, 제 2020-BO-0018 호, for HQ-080~300, 제 2020-BO-0019 호
KCs Ex tD A21 IP6X T135℃, -20℃ ~ +60℃:
for HQ-008/010, 제 2020-BO-0012 호, for HQ-015/020, 제 2020-BO-0013 호,
for HQ-030~060, 제 2020-BO-0014 호, for HQ-080~300, 제 2020-BO-0015 호 – 20 Rev0]
④ CCC: for HQ-008 ~ HQ-300 with LCU, CNEX 2021 3123 0700 0205
Ex d IIB T4 Gb, Ta -20℃ to +60℃, Ex tD A21 IP6X T135℃ ----- 21 Rev2]

[Notes :

- Sealing devices must be used and shall be fitted directly at enclosure wall when using conduit.
- [Cable glands shall be suitable for the environment and shall be certified as flameproof (Ex db) and/or dust ignition proof (Ex tb) if used in Zone 1 or Zone 21 application. --- 17 rev 1]
- Cable glands and conduit to be installed minimum 6 full threads and the length of thread is minimum 8mm.
- Temperature of cable entry is maximum 100℃. Heat resistance wire is recommended when you install for flame proof and/or dust ignition proof.
- Ex db flame proof and/or dust ignition proof Ex tb certified cable gland shall be used with 100′C application. --- 17 rev1]
- [All information about the material and the allowance of LCU fasteners
  - Fasteners with yield strength ≥ 210MPa (stainless steel)
  - Bolts type : M5*0.8, M6*1, M8*1.25, M10*1.5, M12*1.75 (Tolerance Fit 6g) ---17 rev0]
- Cable connection : Refers to the Appendix Ⅱ (Wiring Diagram)
- For cable entries or conduit entries that are not used, user or installer shall close by certified blanking elements(stopping plugs) so that the flameproof or dust ignition proof properties of the enclosure are maintained.
- Always ground the enclosure in accordance with local electric codes. The most effective enclosure grounding method is a direct connection to earth ground with minimal impedance. Methods for grounding the enclosure include:
  Internal ground connection : The internal ground is located in the terminal block #1. Refer to the enclosed wiring diagram.
  External ground connection : The ground lug is located on the center of cable entries.
  ▶For more information, refer to the Appendix Ⅲ (Grounding) ------- 15 Rev1]
- [Stainless steel name plate for the flame proof and dust ignition proof type shall be permanently attached by rivets or screw on the cover, EAC certified products shall be attached on side of body using rivets.----- 20 Rev0]

2.2. Initial Inspection

Upon on the receipt of the actuator, the user should inspect the condition of the product and ensure that product specification stated in the name plate matches with the order sheet.

2.2.1. Remove the packing wrap or wooden box carefully. Inspect the product for any physical damage that may have occurred during shipment.

2.2.2. Check the product specification with product ordered. If a wrong product has been shipped, immediately report to our coordinator.

2.3. Storage

Actuators must be stored in a clean, cool and dray area. The unit should be stored with the cover installed and the cable entry openings sealed. Storage must be off the floor, covered with a sealed dust protector. When actuators are to be stored outdoor, they must be stored off the ground, high enough to prevent from being immersed in water or buried in snow.

3. General Information and Features

3.1. General information

HKC HQ-series electric actuators are designed for the operation of industrial valves; e.g. butterfly valves and ball valves. The actuator torque outputs range from 40 Nm to 8,830 Nm (350 In-Lbs to 78,120 in-Lbs). Currently 19 models are available. [In case of explosion proof or dust ignition proof type, the rated current may be different due to the difference in the approved data, so please contact HKC. ---21 r0]

3.1.1. Standard technical data

HQ (Model)	Max. output torque	Operating time(sec) 50/60Hz	Max bore size	Rated current (A, tolerance ±10%), (50/60 Hz)									Duty rate	No. of handle turn	Weight
				DC	AC, 1 phase, 50/60 Hz					AC, 3 phase, 50/60 Hz					
	kgf.m	90°	Ømm	24	100	110	200	220	240 50Hz	380	440	460	S4(%)	n	kg
HQ-004	4	12 / 12	11	0.5	0.2 / 0.2	0.1 / 0.1	0.2 / 0.2	0.1 / 0.1	-	NA	NA4	NA5	70	8	1
HQ-005	5	11 / 11	14	1	-	0.1 / 0.1	-	0.1 / 0.1	-	-	-	-	70	10	3
HQ-006	6	14 / 12	14	1.7	0.5 / 0.5	0.4 / 0.4	0.3 / 0.3	0.2 / 0.2	0.2	NA	NA	NA	35	8	3
HQ-008	8	16 / 13	20	3.7	1.3 / 1.3	1.2 / 1.1	0.7 / 0.6	0.6 / 0.6	0.7	0.2 / 0.3	0.6 / 0.4	NA	70	10	7
HQ-010	10	20 / 17	20	4	1.3 / 1.3	1.2 / 1.1	0.7 / 0.7	0.7 / 0.6	0.7	0.2 / 0.3	0.6 / 0.4	NA	70	10	7
HQ-015	15	25 / 21	22	5.3	2.4 / 2.2	2.1 / 2.0	1.1 / 1.1	1.0 / 1.0	1	0.6 / 0.4	0.6 / 0.4	0.6 / 0.4	70	11	17
HQ-020	20	25 / 21	22	6.5	2.5 / 2.3	2.2 / 2.1	1.2 / 1.2	1.1 / 1.1	1.1	0.7 / 0.5	0.6 / 0.4	0.6 / 0.4	70	11	17
HQ-030	30	31 / 26	35	8.6	2.3 / 2.7	2.1 / 2.4	1.1 / 1.4	1.0 / 1.3	1.1	0.6 / 0.5	0.4 / 0.3	0.4 / 0.3	70	13.5	22
HQ-050	50	31 / 26	35	12.8	3.6 / 4.6	3.3 / 4.2	1.9 / 2.1	1.7 / 1.9	1.3	0.9 / 0.8	0.8 / 0.5	0.7 / 0.5	70	13.5	23
HQ-060	60	31 / 26	35	NA	3.8 / 4.9	3.4 / 4.4	2.1 / 2.3	1.9 / 2.0	1.3	1.0 / 0.9	1.4 / 0.9	1.3 / 0.9	70	13.5	23
HQ-080	80	37 / 31	45	NA	6.0 / 6.3	5.4 / 5.7	2.9 / 3.1	2.6 / 2.8	2.6	1.3 / 1.0	1.7 / 0.9	1.6 / 0.9	70	16.5	29
HQ-120	120	37 / 31	45	NA	7.2 / 7.6	6.5 / 6.9	3.1 / 3.3	2.8 / 3.0	2.9	1.5 / 1.1	1.8 / 1.0	1.7 / 0.9	70	16.5	29
HQ-200	200	37 / 31(1)	65	NA	6.0 / 6.3	5.4 / 5.7	3.4 / 3.3	3.1 /3.0	3.1	1.4 / 1.0	1.7 / 1.0	1.6 / 0.9	50	49.5	75
HQ-270	270	56 / 47(1)	65	NA	7.0 / 7.4	6.3 / 6.7	3.5 / 3.4	3.2 / 3.1	3.2	1.5 / 1.1	1.8 / 1.0	1.7 / 0.9	50	49.5	75
HQ-300	300	112 / 93	65	NA	7.2 / 7.6	6.5 / 6.9	3.1 / 3.3	2.8 / 3.0	2.9	1.5 / 1.1	1.8 / 1.0	1.7 / 0.9	50	49.5	75
HQ-350	350	39 / 33	75	NA	24.9 / 19.2	22.6 / 17.4	12.4 / 9.5	11.2 / 8.7	11.2	4.2 / 3.0	3.8 / 2.6	3.6 / 2.5	40	42	75
HQ-400	400	58 / 49	75	NA	24.9 / 19.2	22.6 / 17.4	12.4 / 9.6	11.2 / 8.7	11.3	4.2 / 3.0	3.8 / 2.6	3.6 / 2.5	40	42	75
HQ-600	600	78 / 66	110	NA	16.3 / 11.6	14.8 / 10.5	9.9 / 7.0	9.0 / 6.3	-	3.6 / 3.3	2.1 / 1.8	2.0 / 1.7	40	84	215
HQ-900	900	117 / 99	110	NA	16.3 / 11.6	14.8 / 10.5	9.9 / 7.0	9.0 / 6.3	-	3.6 / 3.3	2.1 / 1.8	2.0 / 1.7	40	84	215

Note : Technical data of above may be changed without pre-notice.
[(1) Operating time of 110V ac 1ph is applied 112/93.
(2) Above data shall be applied separately for Explosion proof type actuators in accordance with relevant approval certificate --- 19 Rev1]
[(3) Delete HQ-800, 1000, 1100 models --- 20 r0]

3.1.2. Hand Wheel and Declutching

HQ-series actuators are provided with a declutchable manual override system.

① In order to manually operate the actuator, pull the manual override engagement level towards the hand-wheel until it remains in position.
② Turn the hand-wheel until the valve reaches the required position.
③ Turn clockwise to close and counter-clockwise to open.

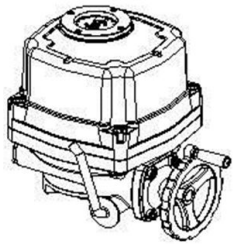

3.1.3. Additional standard technical data

Enclosure Rating	Ingress protection IP67, NEMA 4,4X & 6
Enclosure	High grade aluminium alloy, Anti-corrosion coated
Motor	Squirrel caged induction motor
Limit Switches	2 x open/close SPDT, 250 Vac 16A rating
Auxiliary Limit Switches	2 x open/close SPDT, 250 Vac 16A rating [(except HQ-008/010)-17R0]
Torque Switches	Open/close SPDT, 250Vac 16A Rating [(except HQ-008/010)-17R0]
Stall Protection	Built-in thermal protection
Travel Angle	90 degree +/- 10%
Indicator	Continuous position indicator
Self-Locking	By means of worm gear
Mechanical Travel Stops	2 x external adjustable mechanical travel stops
Cable Entries	[2xNPT 3/4", 2xM25 for Ex db, additionally M20, M25 and NPT3/4" with M30 adaptor for Ex tb. (by user selection) ---- 17 Rev0]
Lubrication	Grease moly EP which will be almost permanently lubricated. However, periodical preventive maintenance will extend the operating life
Ambient Temperature	-20 ℃~ + 60 ℃(except on CPT & PCU board)
External Coating	Dry powder polyester coating, [max thickness 2mm for Ex tb application ---- 17r1]

3.1.4. Optional technical data

EXD	Flameproof enclosure IECEx, ATEX, CSA, KCs, [EAC ----- 20 Rev0]
EXTB	Dust Ignition proof enclosure IECEx, ATEX, KCs, [EAC ----- 20 Rev0]
WTA	Watertight enclosure (IP68 10m / 72hr)
PIU	Potentiometer unit (0~1KΩ)
PCU	Proportional control unit (input, output 0~10 V dc, 4~20mA dc)
ATS	Additional torque switches (SPDT X 2ea 250V ac 16A Rating)
SICU	[Semi-Integral control unit(LCU-B+IMS+phase protect indicator) (5W max)
ICU	Intelligent digital control unit(LCU-C+IMS+auto phase discriminator) (5W max) –18 Rev1]
CPT	Current position transmitter(output 4~20mA dc)
EXT	Extension 120°,180°, 270° turn
ALS	Additional limit switches (SPDT X 2ea, 250 V ac, 16A Rating)
LPA	Lever plate actuator
SLU	Signal lamp unit(white: power on, red: open, green: close, yellow: over torque)
[PRB	Profibus (5 V dc, 0.1 A max, if redundancy is multiply 2)
MOB	Modbus (5 V dc, 0.1 A max, if redundancy is multiply 2) --- 18 Rev1]
FPA1	Fire proofing actuator, 50 minutes at 1,050 ± 5℃
FPA2	Fire proofing actuator, 150 minutes at 250 ± 5℃

3.1.5. Duty Cycle *1

[Duty cycle data were indicated Clause 3.1.1 Standard Technical Data.--- 16 Rev1]
Exceeding the actuator's rated duty cycle may cause thermal overload.

Note *1 Type of duty according to VDE 0530 / IEC 60034-1

Short – time duty S2	Intermittent duty S4
The operation time at a constant load is short, so that thermal equilibrium is not reached. The pause is long enough for the machine to cool down to ambient temperature. [Example, the duration of the short –time operation is limited to 15min ------ 15 Rev0]	The duty is a sequence of identical cycles which consist of starting time, operation time with constant load and rest period. The rest period allows the machine to cool down so that thermal equilibrium is not reached. [Example, the relative on-time at S4-25% or S4-50% is limited to 25% and 50% respectively. ----- 15 Rev0]

3.1.6. Space Heater

Condensation in the actuator is possible due to wide fluctuation of the ambient temperature. The heater integrated in the control unit prevents from this in general.
Ceramic housing with thermostat to prevent over heating with 60℃ set temperature.

Heating Element	Self-regulating	
Voltage Range (HQ-008~010) (based on the control power)	110 V ac	5W 4.5kΩJ
	220 V ac	5W 18kΩJ
	24 V dc	5W 200ΩJ
	12 V dc	[5W 56ΩJ --- 21 Rev1]
Voltage Range (HQ-015~300) (based on the control power)	110 V ac	10W 2kΩJ
	220 V ac	10W 8kΩJ
	24 V dc	10W 100ΩJ
	12 V dc	10W 27ΩJ

[**Note**: Heaters of above were corrected from 2W. The heaters are regulated automatically up to no-condensation point in enclosures only. Because there are not affected to explosion proof performance. ------- 15 Rev0]

3.2. External Parts for Standard Models

3.2.1. HQ-008 ~ HQ-120

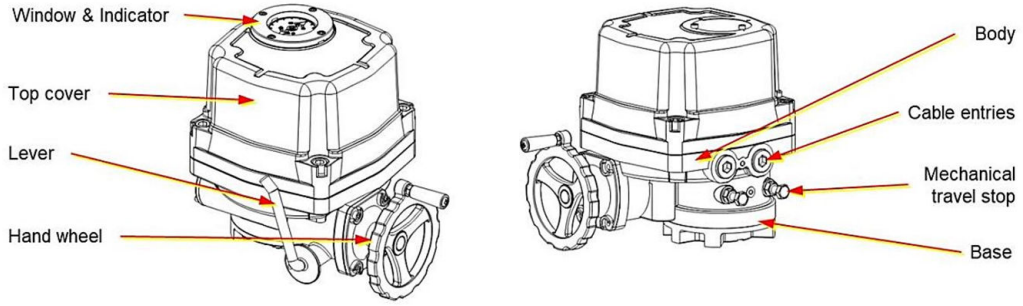

3.2.2. HQ-200 ~ HQ-300 (Actuator + Gear Box)

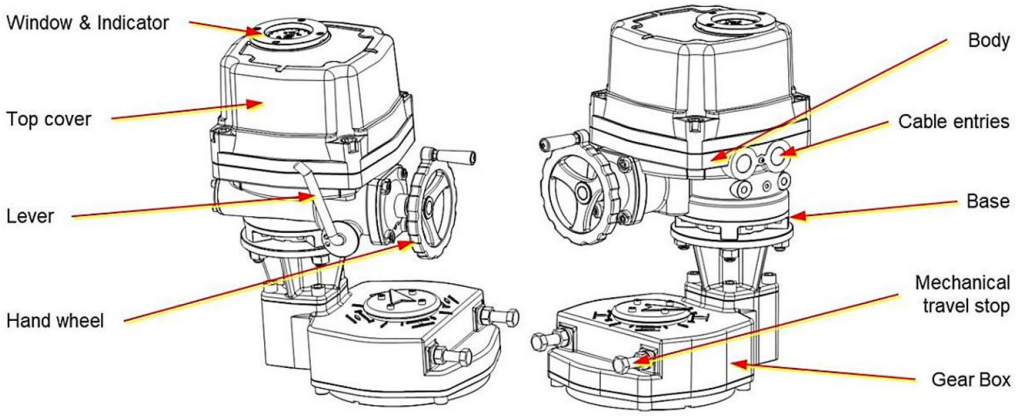

3.3. Internal parts for standard model

3.3.1. HQ-008 ~ HQ-080

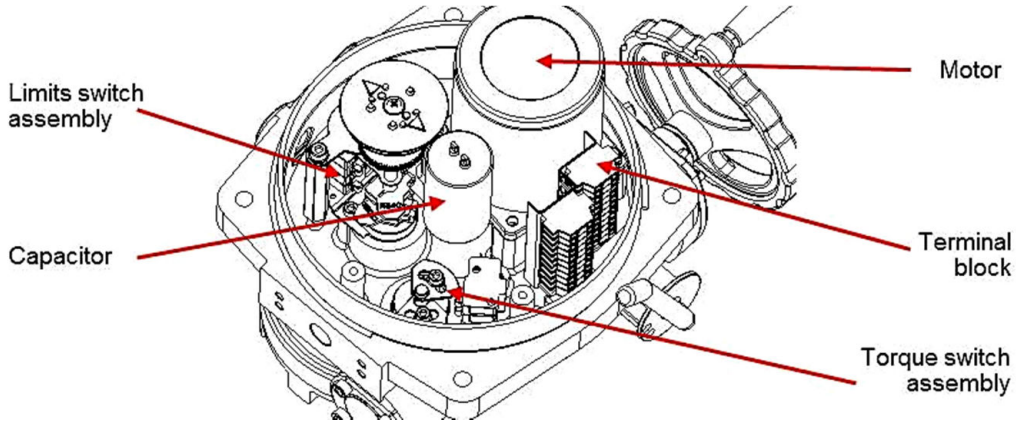

Note:

HQ-008~HQ-010 does not contain torque switch assembly.

4. Installation

4.1. Pre-installation

4.1.1. Use in general service

Verify the actuator's nameplate to ensure correct model number, torque output, operating speed, voltage and enclosure type before installation or use.

It is important to verify that the torque output of the actuator is appropriate for the torque requirements of the valve and that the duty cycle of the actuator is appropriate for the intended application.

4.1.2. Use in potentially explosive atmosphere

Model	HQ - . . . 3 .0 . . . 0 [1)]
Type of protection	[IECEx: Ex db IIB T4, Ex tb IIIC T135℃ Db, ATEX: II 2G Ex db IIB T4 Gb, II 2 D Ex tb IIIC T135℃ Db---17 Rev0]
Ambient Temperature	-20 ℃ ~ +60 ℃

If remained openings on the enclosure after installation for use in potentially explosive atmosphere, the hole shall be blanked with a [certified blanking element suitable for protection of Ex db IIC or Ex tb IIIC respectively. ----- 16 Rev1]

DANGER: *Installation, commissioning, maintenance, repairs and modification work must only be performed by qualified personnel with extensive knowledge on how to work on explosion-proof electrical equipment.*

WARNING:
Read this installation, operation and maintenance manual carefully and completely before attempting to install, operate, or troubleshoot the HKC actuator.

NOTE:
1) Further information can be found from the HQ-series electric actuator catalogue
Refer to the CI.3 in this manual

4.2. Actuator Mounting

Note:
Prior to mounting, the part-turn actuator must be checked for any damage
Damaged parts must be replaced by original spare parts

4.2.1. Mounting is most easily done with the valve shaft pointing vertically upward. But mounting is also possible in any other position; the actuator may be mounted in any position.

4.2.2. The HQ-series electric actuators are supplied with a female drive output. The ISO5211 bolt patterns are provided for actuator mounting. The actuator drive bush is removable for ease of machining. It is mandatory for the actuator to be firmly secured to a sturdy mounting bracket or directly mounted to the valves' ISO mounting pad. High tensile bolts or studs with spring locking washers must be used.

4.2.3. The valve output shaft must be in lined with the actuator output drive to avoid side-loading the shaft. To avoid backlash, flexibility in the mounting bracket or mounting should not be allowed.

CAUTION:
Do not attempt to work on your HKC actuator without first shutting off the incoming power.
Do not attach ropes or hooks to the hand wheel for the purpose of lifting by hoist

4.2.4. Actuator Mounting Base Details (ISO 5211)

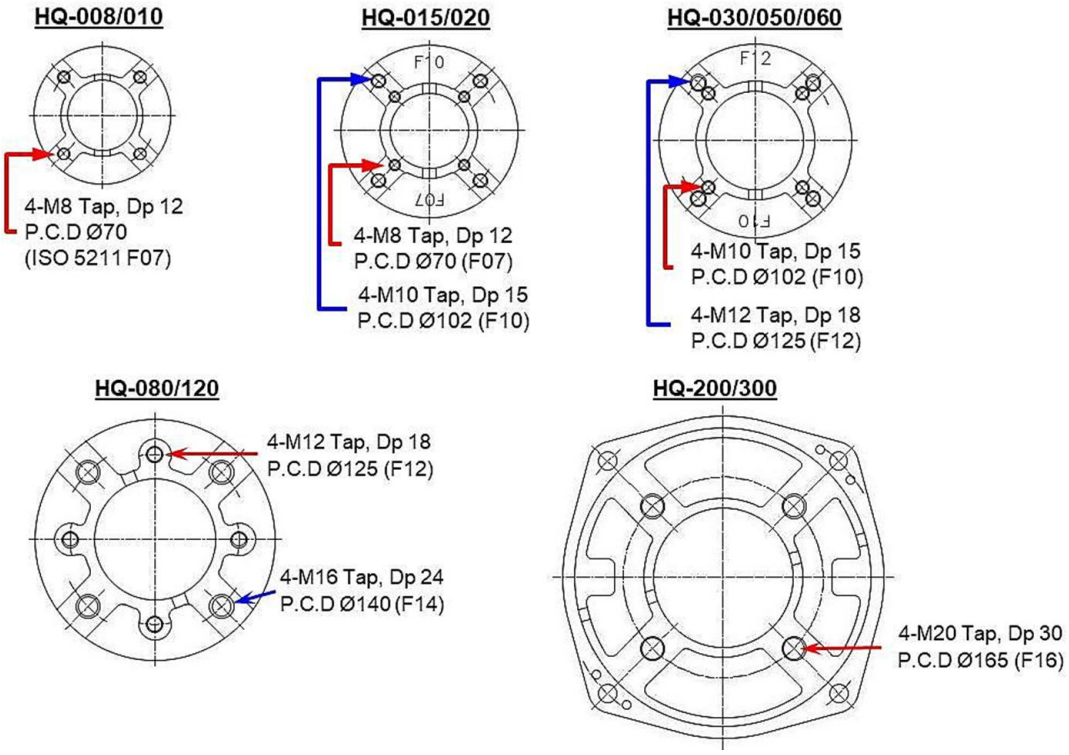

4.2.5. Actuator Drive Bushing

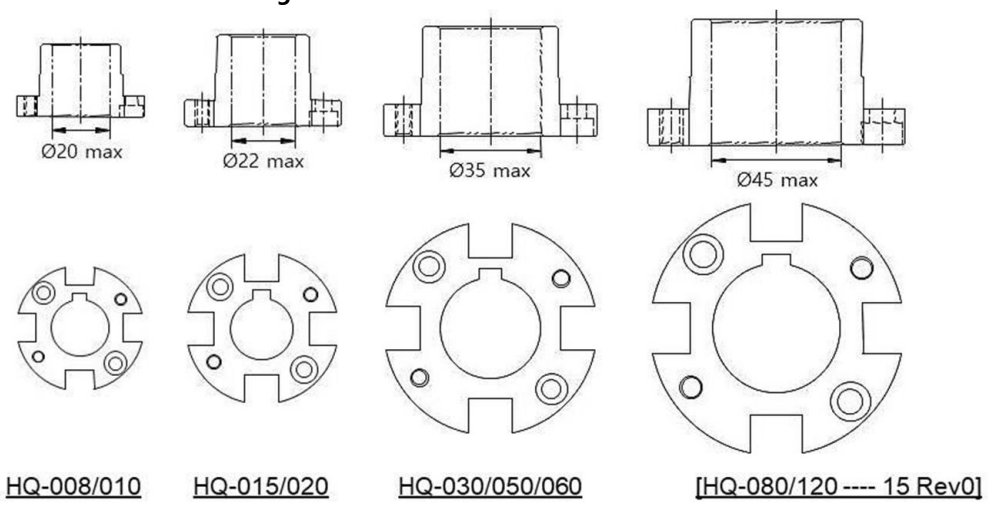

4.3. Limit Switch Setting

4.3.1. Manually rotate the hand wheel of the actuator to fully closed position
4.3.2. Using a hex wrench, loosen the set screw in the CLOSE limit switch cam
4.3.3. Rotate the CLOSE cam towards CW until sounds 'clicks' from the limit switch lever. (see Figure 1)
4.3.4. Tighten the set screw with the hex wrench
4.3.5. Manually rotate the hand wheel of the actuator to opened position
4.3.6. Using the hex wrench, loosen the set screw in the OPEN limit switch cam
4.3.7. Rotate the OPEN cam towards CCW until sounds 'clicks' from the limit switch lever. (see Figure 2)
4.3.8. Tighten the set screw with the hex wrench

DANGER:
HAZARDOUS VOLTAGE. Make sure all incoming power is disconnected before setting the limit switch

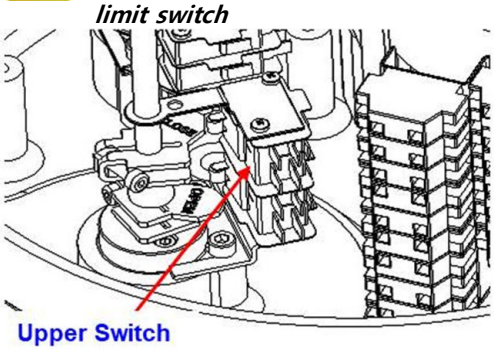

Figure 1: Close Cam Setting

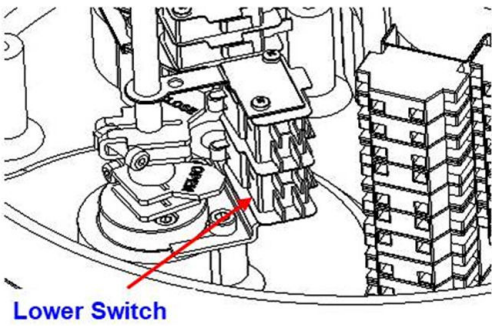

Figure 2: Open Cam Setting

4.4. Torque Switch Setting

4.4.1. Torque spring, which detects the variation of torque during the operation, is installed to prevent damaging the valve and actuator under overload condition. Once the actuator is under overload, the torque switch trips, and the actuator stops immediately.
4.4.2. The torque switches are set by manufacturer on the production site. If re-setting is necessary, please contact the HKC service representative before setting the torque switch.

CAUTION:
Do not reset torque switch to a setting higher than the maximum setting stated by the manufacturer.

4.5. Counter-Clockwise to Close Setting

Standard actuators are normally set to clockwise rotation to close. However, the rotation can be reversed to counter-clockwise to close by simply reconfiguring the wiring as follows:

4.5.1. Reverse wiring in the main terminal block: 9 & 10 as well as 11 & 12.
4.5.2. Adjust the visual indicator to suit the counter-clockwise rotation.
4.5.3. If a PCU card is installed: change P1 (orange) and P3 (grey) on the PCU board.
4.5.4. Move the actuator manually to half-open position and push the auto-reset button once.

4.6. Mechanical Travel Stop Adjustment

4.6.1. Loosen both (open and close) travel stopper bolt nuts by 3-4 threads.
4.6.2. By turning the hand wheel, manually operate the actuator so that it is in close position until it makes a contact with the closed limit switch.
4.6.3. Tighten the close travel stopper bolt until it contacts the 2nd worm wheel (in this position the close travel stopper bolt should not be able to travel any further).
4.6.4. Loosen back the close travel stopper bolt by on turn and tighten the close travel stopper bolt nut.
4.6.5. Repeat the same operation for setting of the open travel stopper bolt.

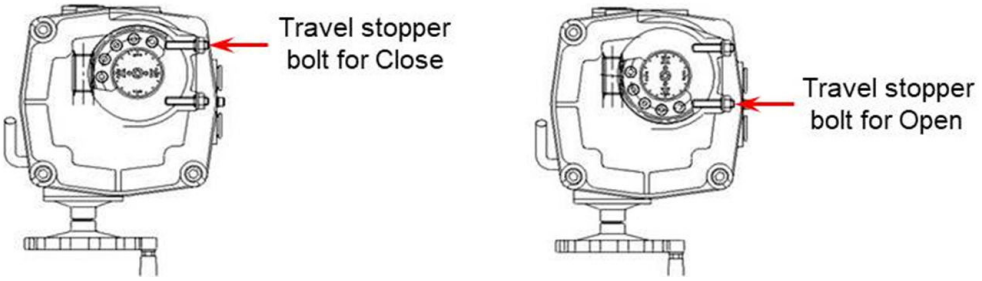

4.7. Setting Potentiometer (Replacement and Setting)

The potentiometer has been calibrated at factory. However, if re-calibration is required, proceed as follows:

4.7.1. Manually rotate the hand wheel of the actuator to fully closed position.
4.7.2. [While measuring the resistance between P1 and P2, gently rotate the Potentiometer Gear until it reaches between 80 - 120 Ω (100 Ω preferred).--- 16Rev1]
4.7.3. Engage the Potentiometer Gear into the Point Shaft Gear and use an L-wrench to tighten the screw.[Delete "Danger" --- 16 Rev1]

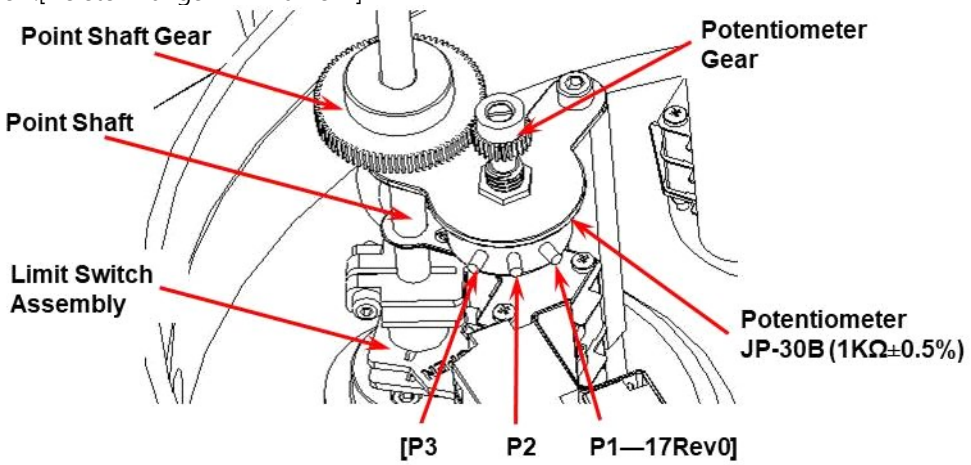

4.8. **Current Position Transmitter – CPT (Optional)**

The potentiometer is used for the actuator signal feedback. It reads a resistance value corresponds to the current position of the actuator and transfers to CPT card. The CPT indicates the current position of the actuator throughout the stroke by a 4 ~ 20mA output signal.

4.8.1. Standard Features

Model	CPT
Power	220(110)V ac, 50/60Hz, 2VA max
Output Signal	4~20mA dc
Output Impedance	750Ω max
Deadband	min 1/1000
Position Conversion Accuracy	±0.5 ~ ±1.5%
Ambient Temperature	-20 ℃ to +70 ℃
Ambient Humidity	90% RH max (Non-condensing)
Dielectric Strength	[1 sec at (rated V ac x 2 + 1000) x1.2 (from Input power to ground) ------ 15 Rev0]
Insulation Resistance	above 500V dc, 30MΩ
Vibration	10g, 0~34Hz

4.8.2. Calibration of Zero and Span – CPT

The settings of Zero and Span have been calibrated at the factory. However, if re-calibration is required, proceed as follows:

① Apply power (or use the manual override) to drive the actuator to its fully closed position (clockwise rotation).

② When the actuator is in the fully closed position, adjust the ZERO dial on the CPT board until a reading of 4mA is achieved.

③ Apply power (or use the manual override) to drive the actuator to its fully open position (counter-clockwise rotation).

④ When the actuator is in the fully open position, adjust the SPAN dial on the CPT board until a reading of 20mA is achieved.

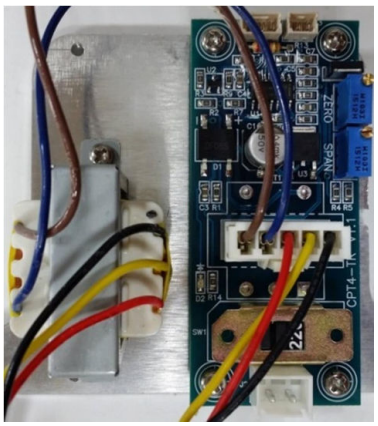

Anti-vibration type

General type

4.9. Proportional Control Unit

[Never welding should be done while the power line is connected to the actuator. Electrical shock can cause serious damage to the microprocessor of the actuator. ----- 17 Rev1]

4.9.1. [PCU EB-V1.5D for AC, Optional

Front

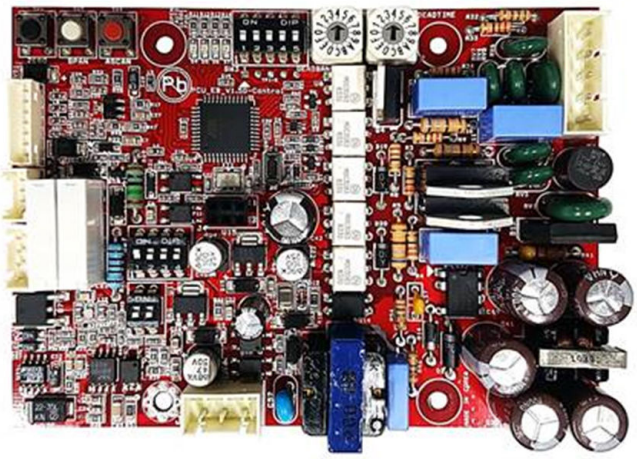

Back

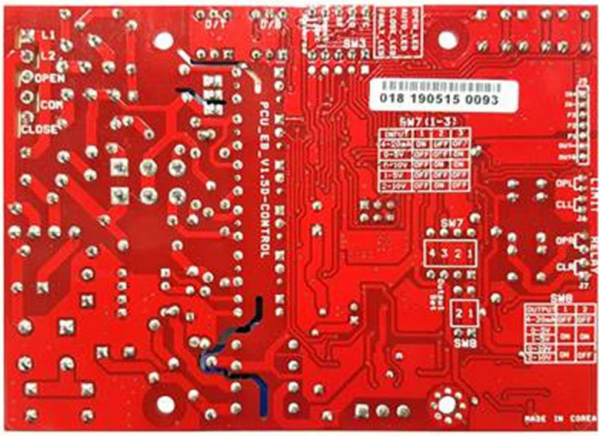

4.9.2. [PCU DC-V2.1C for DC, Optional

Front

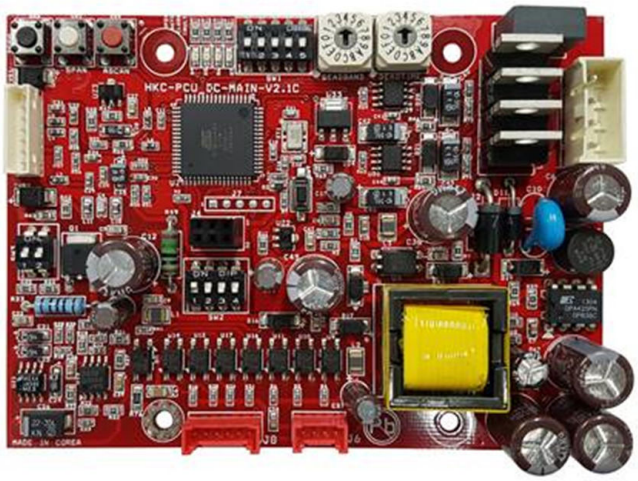

Back

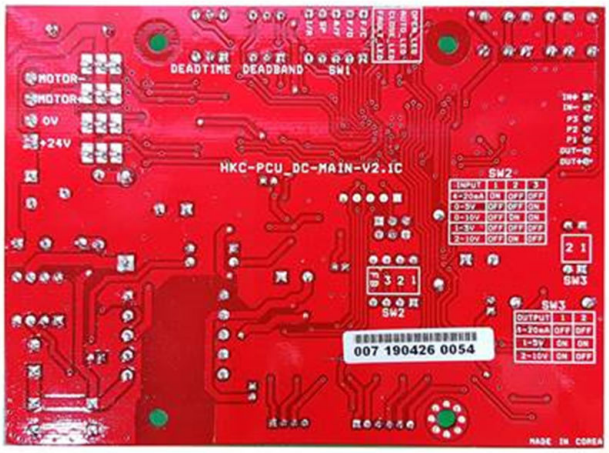

4.9.3. Standard Specification

Table 1: Standard specification of the Proportional Control Unit

Model	PCU EB-V1.5D (for AC)	PCU DC-V2.1C (for DC)
Indicated on the board	PCU_EB_V1.5D-CONTROL	HKC-PCU_DC-MAIN-V2.1C
Special function	Applied Electronic Breaking system (EB) for high resolution control.	NA
Power	110V/220V ac ±10%, 50/60Hz, 4VA max	24V dc ±10%, 7A max
Input signal (set point)	4~20mA dc, 0~20mA dc, 1~5V dc , 0~5V dc , 2~10V dc, 0~10V dc	
Input impedance	100 kΩ and over	
Output signal (feedback)	4~20mA dc, 0~20mA dc, 1~5V dc , 0~5V dc , 2~10V dc, 0~10V dc	
Output impedance	100 Ω and less	
Position resistance	100~10 kΩ	
Dead time	0.2~7.5 sec (It can be set in 16 step) • Step 0 : 0.2 sec • Step 1~4 : 0.25~1sec (0.25sec/step) • Step 5~15 : 2.5~7.5sec (0.5sec/step)	
Dead band	0.3~7.5 % (It can be set in 16 step) • Step 0 ~ 4 : 0.3~0.7 % (0.1 %/step) • Step 5 ~ 9 : 1 ~ 1.8 % (0.2 %/step) • Step10 ~15 : 5 ~ 7.5 % (0.5 %/step)	0.4~7.5 % (It can be set in 16 step) • Step 0~4 : 0.4~0.8 % (0.1 %/step) • Step 5~9 : 1 ~ 1.8 % (0.2 %/step) • Step10~15 : 5 ~ 7.5 % (0.5 %/step)
Fault mode	Fail close, Fail open, Fail stop	
Position conversion accuracy	±(0.2 to 5)% (may vary depending on conditions)	
Ambient temperature	-25℃ to 80℃	
Ambient humidity	90% RH max. (non-condensing condition)	
Dielectric strength	1500V ac, 1 minute	500V ac, 1 minute
Insulation resistance	500V dc, 50MΩ or more	
Vibration and shock	X, Y, Z axis 10g (@ 6g RMF), frequency: 0.2-34 Hz, time: within 30 minutes	

4.9.4. Main function and usage for PCU

① Select input signal switch

Dip Switch	PCU model	Power source
SW7	PCU-EB-V1.5D	for AC
SW2	PCU-DC-V2.1C	for DC

Depending on the system environment, the user can select the required command signal type by setting the DIP switch SW7 or SW2 as above table.

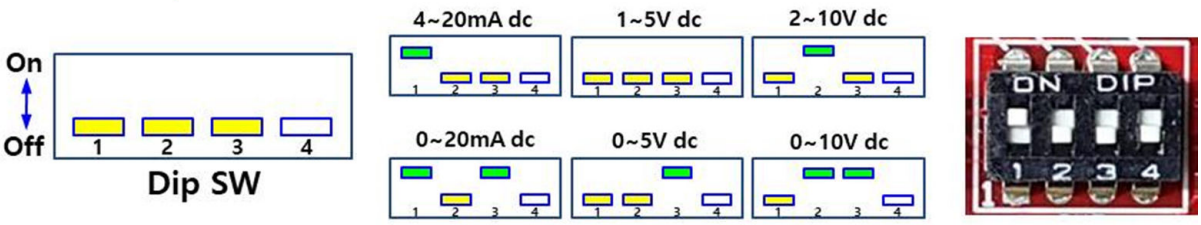

Notes : DIP switch is commonly set with 4~20mA dc before shipping.
Please make sure whether the input signal and DIP switches are correct as intended use.

Caution : Zero switch (No. 3) is applied to input and output signals equally.

② Select output feedback signal switch

Dip Switch	PCU model	Power source
SW8	PCU-EB-V1.5D	for AC
SW3	PCU-DC-V2.1C	for DC

Depending on the system environment, the user can select the required output feedback signal by setting the DIP switch as above table.

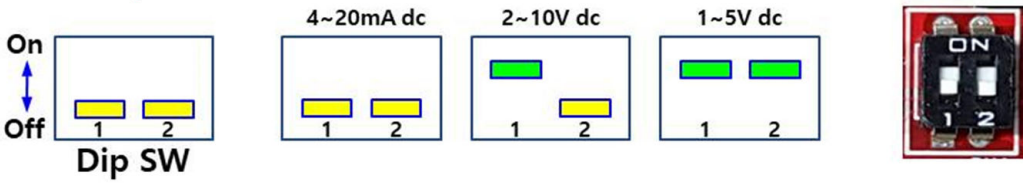

Notes : DIP switch is commonly set with 4~20mA dc before shipping.
Caution : Please refer to Zero switch (No. 3) of the clause "6.1 Select input signal switch".

4.9.5. Deadband setting

① Deadband means maximum allowable tolerance of the actuator stop position according to command signal.

② It is also minimum variation value of command signal to operate the actuator.

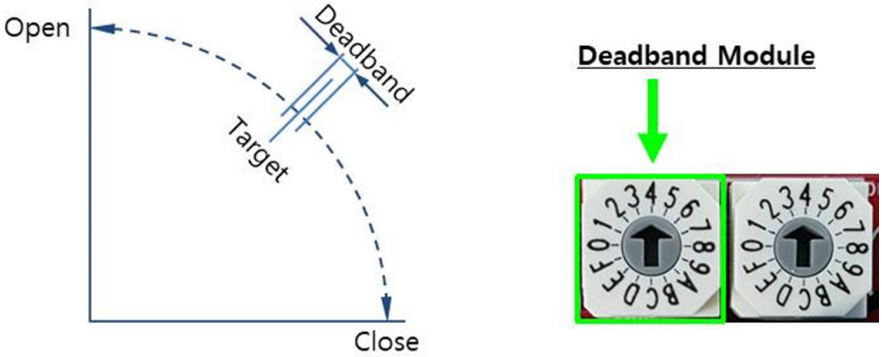

③ Adjustable setting range : (16 steps available)

- Step 0~4 : increase 0.1% increment per step
  (0.3 ~ 0.7 % for PCU-EB-V1.5D ac)
  (0.4 ~ 0.8 % for PCU-DC-V2.1C dc)
- Step 5~9 : increase 0.2% increment per step (1.0% ~ 1.8%)
- Step A~F : increase 0.5% increment per step (5.0% ~ 7.5%)
- Initial setting is "4"

④ If the setting value is too low, the actuator may not be found the target point and it may be repeatedly operated in forward or reverse direction. This is called "Hunting" and the user must appropriately adjust the deadband to avoid from the hunting.

⑤ Continuous hunting causes a failure of the actuator parts such as motor, PCU board, potentiometer and etc.

4.9.6. Deadtime setting

① This is necessary to apply the command signal.

② It is the minimum time for maintaining the state of the input signal satisfying the deadband.

③ Actuator only accepts input signal satisfying the setting value of the deadtime as normal and operates. It is for preventing from abnormal operation of the actuator by external disturbance such as noise.

④ Adjustable setting range : 0.2~7.5 sec (16 steps available)

- Step 0 : 0.2 sec (minimum value)
- Step 1~4 : increase 0.25 sec increment per step (0.25~1 sec)
- Step 5~F : increase 0.50 sec increment per step (2.5~7.5 sec)
- Initial setting is "4"

4.9.7. Auto setting

① Check connection status of the input power and input/output signal after actuator and valve are correctly assembled.
② If there is no problem with the wiring, push the auto setting button once (ASCAN).
③ Then the LED lights on the PCU board will be flickering and perform the auto setting function.
④ Auto setting details
② Blue LED will be continuously flickering.
③ Green LED will be flickering while closing and it will be 'ON' after fully closed.
If the actuator is already in closed position, the closing operation will be skipped.
④ Red LED will be flickering while opening and it will be 'ON' after fully opened.
⑤ Green LED will be flickering while closing and it will be 'ON' after fully closed.
⑥ When all of the sequences are automatically and successfully completed, Blue LED will be 'ON' and then actuator will move to pre-set position

Notes: If you press any button of ZERO/SPAN/ASCAN during the auto setting processes, the auto setting mode will be cancelled.

4.9.8. Fail close (FC), fail open (FO) and fail stop

Dip Switch	PCU model	Power source
SW3	PCU-EB-V1.5D	for AC
SW1	PCU-DC-V2.1C	for DC

When an analogue command signal does not come in or a wrong signal is received, the PCU board will detect the Fault and operates actuator automatically in open, close and stop position according to pre-set fail position.

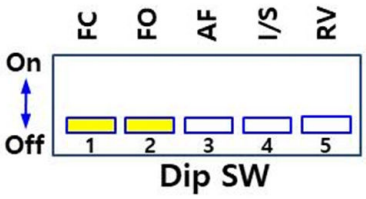

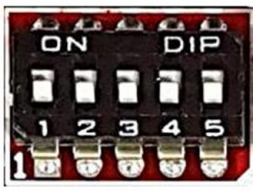

4.9.9. Auto full action (AF)

Dip Switch	PCU model	Power source
SW3	PCU-EB-V1.5D	for AC
SW1	PCU-DC-V2.1C	for DC

① Turn on the AF (Auto Full) DIP switch No3
② Response of the actuator
- Move to fully closed position on input signal of 4.3 mA or lower.
- Move to fully opened position on input signal of 19.7 mA or higher.

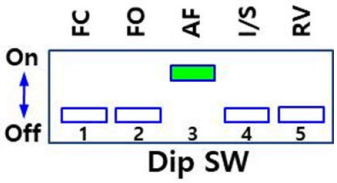

4.9.10. Reverse mode (RV)

Dip Switch	PCU model	Power source
SW3	PCU-EB-V1.5D	for AC
SW1	PCU-DC-V2.1C	for DC

① It is used when user want to operate actuator by inverting input signal and output signal.
② When the command signal is 4 mA, the actuator moves to fully opened position, and makes 4 mA dc as an output signal.
③ When the command signal is 20 mA, the actuator moves to fully closed position, and makes 20 mA dc as an output signal.

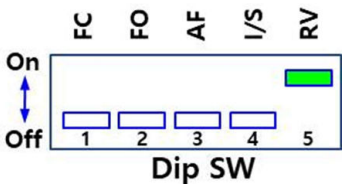

4.9.11. Random command signal setting

Dip Switch	PCU model	Power source
SW3	PCU-EB-V1.5D	for AC
SW1	PCU-DC-V2.1C	for DC

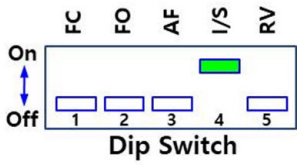

① This function is intended to change the Zero (fully close) and Span (Fully open) signal.
② Adjustable setting range of the Zero signal : about 3~8mA dc
③ Adjustable setting range of the Span signal : about 16~21mA dc

※ Example: Set 5 mA dc as Zero and 19 mA dc as Span signal

- Turn up No. 4 switch (I/S input set) of the dip switch.
- Both Red and Green LED will be flickering quickly.
- About 1.5 seconds later, only the Green LED will be flickering.
- Input 5mA to command signal on the input terminal and then press the ZERO (black) button to unlock.
- If the setting is successfully done, Yellow LED will flicker once and Green LED will be ON (setting completed). Then, Red LED will be flickering for input setting.
- Input 19mA to command signal on the input terminal and then press the SPAN (white) button to unlock.
- If the setting is successfully done, Yellow LED will flicker once and Red LED will be ON (setting completed).
- Wait until only the Green LED flickers after both Red and Green LED flicker for about 1.5 second.
- Turn down No. 4 of the dip switch (I/S input set) to finish the setting.

※ If No. 4 switch of the dip switch is turned down during setting, the setting will be cancelled.
※ If there is no input for 2 minutes, the setting process will also be cancelled.

4.9.12. Adjust output (feedback) signal

Dip Switch	PCU model	Power source
SW7	PCU-EB-V1.5D	for AC
SW2	PCU-DC-V2.1C	for DC

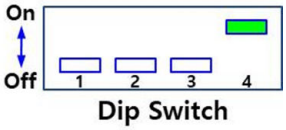

① Adjust Zero (4mA) and Span (20mA) value of the output signal.
② Each time the zero button (Black) is pressed, the output signal will be decreased.
③ Each time the span button (White) is pressed, the output signal will be increased.

※ Example: Set 4 mA dc as Zero and 20 mA dc as Span signal.

- Turn up No. 4 switch of the dip switch.
- Wait until only the Green LED flickers after both Red and Green LED flicker for about 1.5 second.
- Adjust output signal value to 4 mA by pushing the Zero or Span button.
- After checking the 4 mA output signal, press ASCAN button (Red).
- Yellow LED will be ON and OFF.
- Confirm the Green LED is ON and Red LED is flickering.
- Adjust the output signal value to 20 mA by pushing the Zero or Span button.
- After checking the 20 mA output signal, press ASCAN button (Red).
- Yellow LED will be ON and OFF.
- Confirm the Red LED is ON.

- Wait until only the Green LED flickers after both Red and Green LED flicker for about 1.5 second.
- Turn down No. 4 switch of the dip switch.

※ If No. 4 switch of the dip switch is turned down during the setting process, the setting will be cancelled.

※ If there is no input for 2 minutes, the setting process will also be cancelled.

4.9.13. Manual operation mode

① This function allows the user to manually operate the actuator.

② To access this function, press ZERO (Black) and SPAN (White) buttons simultaneously for 1 second. Then, yellow LED will be ON to indicate that the actuator is in Manual Operation mode.

③ Pressing the ZERO button will move the actuator to close position and pressing the SPAN button will move the actuator to open position.

④ If user do not operates within 10 seconds or press ZERO and SPAN buttons again simultaneously for 1 second, PCU board will automatically terminate the Manual Operation mode.

4.9.14. LED display

① Operating display

Status	LED Color	Display	Function
Open	Red	On	Fully opened
		Flicker	Moving to open position
Auto	Blue	On	Power on
		Flicker	Auto setting
Close	Green	On	Fully closed
		Flicker	Moving to close position
Fault	Yellow	On	Manual mode
		Flicker	Malfunction

② Error display on the **PCU-EB-V1.5D board for AC**

PCU-EB-V1.5D board for AC indicates an error condition when the yellow LED is flickering.
At this time, when user presses the ZERO (Black button), user can get the error type from LED status as below.

No	Error type (Malfunction)	LED display			
		Red	Blue	Green	Yellow
1	EEPROM error	Off	Off	Off	**On**
2	Input signal initialization error	Off	Off	**On**	Off
3	Auto setting initialization error	Off	Off	**On**	**On**
4	Input signal error	Off	**On**	Off	Off
5	Reverse turn the motor	Off	**On**	Off	**On**
6	Command signal selector switch error	Off	**On**	**On**	Off
7	Abnormal of potentiometer	Off	**On**	**On**	**On**
8	Open position error	**On**	Off	Off	Off
9	Close position error	**On**	Off	Off	**On**
10	Limit switch error	**On**	Off	**On**	Off

③ Error display on the **PCU-DC-V2.1C board for DC**

PCU-DC-V2.1C board for DC also indicates an error condition when the yellow LED is flickering. At this time, when user push the ZERO (Black button), user can get the error type from LED status as below.

No	Error type (Malfunction)	LED display			
		Red	Blue	Green	Yellow
1	Input signal initialization error	Off	Off	Off	**On**
2	Reverse turn the motor	Off	Off	**On**	Off
3	Auto setting initialization error	Off	Off	**On**	**On**
4	EEPROM error	Off	**On**	Off	Off
5	Input signal error	Off	**On**	Off	**On**
6	Open position error	Off	**On**	**On**	Off
7	Close position error	Off	**On**	**On**	**On**
8	Command signal selector switch error	**On**	Off	Off	Off
9	Limit switch error	**On**	Off	Off	**On**
10	Torque switch trip	**On**	Off	**On**	Off

---------- **21 Rev2]**

4.10. [ac/dc Multi-board --- 16 Rev1]

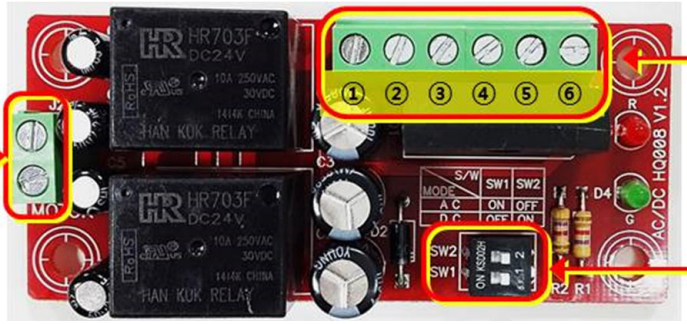

4.10.1. Power, Open and Close terminal

① Power 24V ac/dc (dc + signal block)
② None
③ None
④ Open signal
⑤ Close signal
⑥ Power 24V ac/dc (dc – signal block)

4.10.2. [Chooses for Power input switch

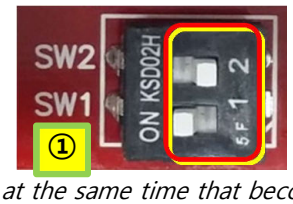

① As using for **ac** mode,
#1 switch on, #2 switch off
② As using for **dc** mode,
#1 switch off, #2 switch on --16 Rev1]

NOTE: *Don't turn on both switch #1 and #2 at the same time that become a reason of damage of the board*

③ [Motor terminal block
- Red wire of motor to connect #1
- Black wire of motor to connect #2 --- 16 Rev1]

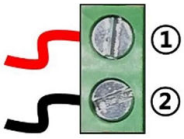

5. [Apply for optional communication protocol

5.1. ProfiBus Controller (PBC)

5.1.1. ProfiBus Controller is to provide multiple functions of communication by using 8 bit microprocessor and Profibus Controller.
5.1.2. Generate long-life contacts to operate actuator in direct or reverse with semiconductor device for open and close by using data from remote controller.
5.1.3. Provide the user actuator status information to confirm if Profibus is working correctly as the user want.
5.1.4. Max. transmission speed is 12Mbit/sec
5.1.5. Easy to switch between PCU type and ON-OFF type.
5.1.6. Provide System Redundancy by using dual port and high reliability
5.1.7. LED lamps provide the status of actuator.
5.1.8. **Application**

① Multiple remote control of valve actuator with AC power

ProfiBus Card

Termination Board

5.1.9. Specification

Item	Description	Unit
Input power	87V ~ 270V ac ±10% , 50/60Hz ±2% 4VA max. Input power must match motor ratings	V, A
Communication	Profibus communication (RS-485 base)	
Max. range	1000m @ 9.6 ~ 187.5 k Baud	m
Bit rate	Up to 12mega	Baud
Wiring terminals	SMW250-3P * 4 (Profibus signal) YW396-5P (Main power & Motor) SMW250-8P (CTS, OTS, CLS, OLS contact input) SMW250-6P (Firmware update connector) SMW250-4P (Debug connector)	
Visual indicators	Power white, blue LED Fault yellow LED Motor open red LED Motor close green LED	
Control configuration	PC software	
Output contact	Triac 250V ac, 16A max. (Inductive load)	V
Ambient temperature	-10℃ ~ +60℃	℃
Ambient humidity	90% RH max. (non-condensing)	%

For more detail information, please refer to separate ProfiBus operation manual.

5.2. ModBus Controller

5.2.1. This clause explains the Modbus-RTU Slave Module (MBRSM). Positioned at level 7 of the OSI model, MODBUS is an application layer messaging protocol that provides client/server communication between devices connected on different types of buses or networks.

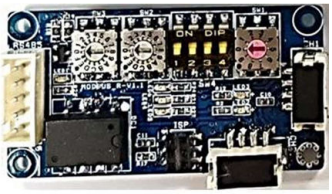

ModBus Card

5.2.2. As a MODBUS Serial Line protocol, MODBUS-RTU (Remote Terminal Unit) is a Master-Slave protocol which takes place at level 2 (Data Link layer) of the OSI model. The master initiates the communication by transmitting the Function Code (a 'request') to the address of a slave and after receiving and processing the Function Code, the slave returns a message (a 'response').

5.2.3. The slaves shall not communicate with each other without the request of the master. Since the MBRSM is based on the 2 wire (half-duplex) RS-485 communication, the network length limit or the number of station should follow the standards of the RS-485 communication. To extend the network, such as adding another segment, repeaters can be used. To ensure stability of the network system, the network redundancy can be configured to slave redundancy.

5.2.4. MODBUS manages the access of data simply and flexibly. MODBUS supports two data types: a Boolean value and an unsigned 16-bit integer. Generally, it is common for field devices to have

certain values defined as inputs while other values are outputs, such as current temperature or valve position.

5.2.5. Specification

① Communication Protocol : Modbus-RTU according to IEC 61158 and IEC 61784
② Topology : Line topology with termination
③ Number of nodes : 32 nodes in each segment without repeater, with repeaters expandable to 247
④ Number of repeaters : Max. 9 with signal refreshing
⑤ Cable length : Max. 1.2 Km with Repeater 10 Km
⑥ Transfer Mode : RS-485
⑦ Transmission Medium : Twisted, shielded 2-Wire cable according to IEC 61158
⑧ Bus Access : Polling between master and slaves (query response)
⑨ Supported Baud Rates : 1200, 2400, 4800, 9600, 19200, 38400, 57600, 115200
⑩ Supported Parity Bit : Odd, Even, None
⑪ Supported Stop Bit : 1, 2

For more detail information, please refer to separate ModBus operation manual. –18 rev1]

6. Wiring

6.1. Electrical Connections and Preliminary Test

WARNING: [You must never do any welding work while the actuator is connected with electrical line. If an electrical shock occurs on the actuator, it makes a cause of serious damage to the microprocessor of the actuator.----- 19 Rev0]

✓ *When working in potentially explosive atmospheres, observe the European Standards EN 60079-14 "Electrical Installation in Hazardous Areas" and EN 60079-17 "Inspection and Maintenance of Electrical Installations in Hazardous Areas". Work on the electrical system or equipment must only be carried out by a skilled electrician himself or by specially instructed personnel under the control and supervision of such an electrician and in accordance with the applicable electrical engineering rules.*

✓ *For cable entries that are not used, user or installer shall close by [Ex db IIC or Ex tb IIIC certified blanking element suitable for each type of protection, Ex db or Ex tb so that type of protection of the enclosure is maintained. ----- 17 Rev0]*

✓ *[Dust ignition proof enclosure! Use a damped cloth for equipment surface cleaning. --- 15 Rev1]*

✓ *[Flame proof enclosure! ---17 Rev0] Treat cover with care. Gap surfaces must not be damaged in any way. Do not jam cover during fitting.*

✓ *[Dust ignition proof enclosure! It may be charged electrostatic potential. Therefore it shall be installed in such way that the risk from electrostatic discharge and propagation brush discharge caused by rapid flow of dust is avoided. --- 15 Rev.1]*

6.1.1. For testing purposes, loosen the bolts on the actuator cover and remove the cover.

6.1.2. Make sure that the power supply voltage is in accordance with the data on the nameplate of the actuator.

6.1.3. [Pass cables through the cable glands: NPT 3/4" or M25 for Ex "db", additionally NPT 3/4", M25 and M20 with M30 insert which shall be only applied for Ex "tb". ----- 17 Rev0]

6.1.4. Connect wires according to the enclosed wiring diagram.

6.1.5. Manually move the valve to half-open position. Then electrically operate the actuator to fully open position and check if the motor rotates in correct direction; standards units are counter-clockwise to open.

6.1.6. Test the actuator and check whether the limit switches work correctly

6.1.7. After the testing, check that all cable glands are correctly tightened. Applicable cable glands should be selected to meet the application's condition. It is recommended to use the grade of IP67 cable gland or higher in potentially explosive atmosphere.

6.1.8. Put carefully the cover on the body and tighten the bolts.

6.1.9. [Tightening torque of the cover bolts should be applied as below.

Model	Cover bolt size (mm)	Tightening Torque	Allowable range
HQ-008/010	M8 x 35	12.5 Nm	10 ~ 15 Nm
HQ-015/020	M10 x 50	24.5 Nm	20 ~ 30 Nm
HQ-030~300	M12 x 55	42.0 Nm	35 ~ 50 Nm
LCU-B, LCU-C	M8 x 35	12.5 Nm	10 ~ 15 Nm

---------- 20 r1]

7. Maintenance

7.1. Maintenance

WARNING:

- ✓ *Turn off all power before attempting to perform maintenance on the actuator.*
- ✓ *POTENTIALLY HIGH PRESSURE VESSEL. Before removing or disassembling your actuator, ensure that the valve or other actuated device is isolated and not under pressure.*

Under the normal conditions, maintenance should be carried out at six month intervals. But when the conditions are more severe, more frequent inspections may be advisable.

7.1.1. Ensure that the actuator is properly aligned with the valve or other actuated device
7.1.2. Ensure that all wirings are insulated, connected and terminated properly
7.1.3. Ensure that all screws are present and tight
7.1.4. Ensure cleanness of internal electrical devices
7.1.5. Ensure that cable connections are properly installed and are dried
7.1.6. Check the internal devices for any condensation
7.1.7. Check the power to the internal heater
7.1.8. Check enclosure O-rings seals and verify that the O ring is not pinched between each joint.
7.1.9. Verify the declutch mechanism
7.1.10. Visually inspect the open/close cycle
7.1.11. [Check whether the o-ring for Ex tb or Ex db enclosure is damaged or not ---- 17 Rev0]
7.1.12. Inspect the identification labels for wear and replace it if necessary

WARNING:

- ✓ *Flameproof Enclosure! Before opening, ensure the absence of any gas and any electrical power*
- ✓ *Treat cover with care. Gap surfaces must not be damaged or dirtied in any way. Do not jam the cover during fitting.*

7.2. Tools

7.2.1. Metric Allen Key (Hex Wrench) × 1
7.2.2. Screw Driver × 1
7.2.3. Metric Spanner × 1
7.2.4. Wrench 200mm × 1
7.2.5. Wrench 300mm × 1
7.2.6. Wire Stripper Long Nose × 1
7.2.7. Multi-meter (ac, dc, resistance) × 1
7.2.8. [In case of PCU-A, -D Board Option: dc Signal Generator (4 – 20mA dc) × 1
7.2.9. In case of PCU & CPT Board Option: mA Meter (0~25mA) x 1 ---16 Rev1]

8. Trouble Shooting

The following instructions are listed the most common difficulties encountered during the installation and start-up, and their countermeasures.

8.1. The actuator does not respond

8.1.1. Visually inspect the actuator to check any shipping or handling damage has occurred
8.1.2. Verify the line voltage supplied to the actuator; check that the line voltage matches with the rating on the actuator's nameplate
8.1.3. Check the internal wiring against the supplied wiring diagram of the actuator
8.1.4. Check the limit switch cams

8.2. The actuator is supplied with power but does not operate

8.2.1. Verify the line voltage supplied to the actuator; check that the line voltage matches with the rating on the actuator's nameplate.
8.2.2. [Make sure that the actuator output torque is greater than the valve required torque -16 Rev1]
8.2.3. Check the limit switch cams
8.2.4. Check that the torque switches have not been tripped
8.2.5. Check the mechanical travel stop adjustment
8.2.6. Verify that the actuator operating direction against the rotation of the valve (standard units are counter-clockwise rotation to open)
8.2.7. [Check internal wiring --- 16 Rev1]
8.2.8. Check for any corrosion and condensation that any of the electrical or mechanical devices have not been contaminated

8.2.9. Verify that coupler/bracket is correctly installed and is not causing any binding

8.3. Actuator runs erratically

8.3.1. Check the ambient temperature

8.3.2. Verify that the duty cycle has not been exceeded

8.3.3. Check the position of manual override lever

8.4. Optional Equipment(s)

8.4.1. Potentiometer --- 16 Rev1]

① Check the resistance value

② Check potentiometer gear for jamming

③ Check ZERO and SPAN calibration, [and confirm input / output signal --- 16 Rev1]

④ Check the board for any damage

8.4.2. Current Position Transmitter

① Verify the input signal

② Check the configuration of the dip switches

③ Check the board for any damage

9. Installation and Maintenance Tips

WARNING:

- ✓ *When working in potentially explosive areas, be sure to comply with the standard EN 60079-14 "Electrical Installations in Hazardous Areas".*
- ✓ *Working on the actuator that is in open the cover and under voltage must only be performed if it is assured that there is no danger of explosion for the duration of the work.*
- ✓ *[Explosion proof enclosure! Before opening, ensure the absence of any flammable gas, dust and voltage --- 16 Rev1]*
- ✓ *[When operation, maintenance, or installation shall be verified that O-rings are not damaged or pinched between their parts. ---- 15 Rev1]*
- ✓ *[Dust ignition proof enclosure! It may be charged electrostatic potential. Therefore it shall be installed in such way that the risk from electrostatic discharge and propagation brush discharge caused by rapid flow of dust is avoided. --- 15 Rev.1]*

CAUTION:

- ✓ *A regular inspection and maintenance should be performed by qualified and trained personnel*
- ✓ *Treat cover with care. Gap surfaces must not be damaged or dirtied in any way. Do not jam the cover during fitting.*
- ✓ *Pay attention to national regulations*

For any installation and maintenance work, the followings should be noted:

9.1. Check the quarter turn actuators visually. Ensure that no external damage or changes are visible. The electrical cables must not be damaged and wired correctly.

9.2. Cable entries, cable glands, plugs, etc. have to be checked whether they are correctly tightened and sealed.

9.3. Check that the Ex-connections are correctly fastened.

9.4. Check for the possible discoloration of the terminals and wires as this may indicate an increased temperature.

9.5. Check the flame path gaps of [the explosion proof --- 16 Rev1] enclosures for any dirt and corrosion. Since the dimensions of all Ex gaps are strictly defined and inspected, no mechanical work shall be performed on them.

9.6. All cables and motor protection elements have to be checked.

9.7. During the maintenance if any defects are detected that may affect the safety, repair measures have to be taken immediately.

9.8. Any kind of surface coating for the gap surface is not permitted.

9.9. When replacing parts, seals, etc., only original spare ones must be used.

Appendix I: HQ series Coding System

[Note: Coding system was consolidated from each model's ------ 15 Rev0]

Example : **HQ – A** **a b c d e f g**

Model Name Code (as below)

Code : A = Torque output, XXX

008: 80 Nm, 010: 100 Nm, 015: 150 Nm, 020: 200 Nm, 030: 300 Nm, 050: 500 Nm, 060: 600 Nm, 080: 800 Nm, 120: 1200 Nm, 200: 2000 Nm, 270: 2700 Nm, 300: 3000 Nm, [350: 3500 Nm, 400: 4000 Nm, 600: 6000 Nm, 900: 9000 Nm ----- 21 Rev0]

Code :

a = Enclosure

1 :Weather proof (NEMA type 4/4X/6, IP67 Include CSA ordinary location item)
2 : Submersible (IP 68, 10m / 72 hr)
3 : Flameproof [(CSA, IECEx, ATEX, KCs, EAC; Ex db IIB T4 Gb) –17Rev0]
4 : Dust ignition proof (IECEx, ATEX, KCs; Ex tb IIIC T135℃ Db)

b = Input Voltage

1 : 110 V ac / 1 Ph
2 : 220 V ac / 1 Ph
3 : 220 V ac / 3 Ph (Except HQ-008, HQ-010)
[4 : 380 V ac / 3 Ph
5 : 440 V ac / 3 Ph --- 18 Rev1]
6 : 460 V ac / 3 Ph (Except HQ-008, HQ-010)
7 : 24 V dc (Except HQ-050 ~ HQ-300)
8 : 24 V ac/dc (Except HQ-050 ~ HQ-300)
9 : 12V dc (Except HQ-015 ~ HQ-300)
A : 12V ac/dc (Except HQ-015 ~ HQ-300)

c = Option 1 : Control Unit

0 : without control unit
[1 : ICU (Intelligent Digital Control Unit : LCU-C+IMS+Auto Phase Discriminator)
2 : SICU(Semi-Integral Control Unit : LCU-B+IMS+Phase Protect Indicator)
3 : RBP (Rechargeable Battery Backup* this option excludes from explosion proof)--- 17 Rev0]
[4 : IMS (Integral Magnetic Starter)
5 : LCU-Z (this option excludes from explosion proof)--------- 19 rev0]

d = Option 2 : Software

0 : [without software --- 16 Rev1]
1 : PIU (Potentiometer Unit : 0~1kΩ)
2 : CPT (Current Position Transmitter : 4~20mA)
3 : PCU (Proportional Control Unit : IN/OUT 0~10V, 4~20mA)
[4 : ModBus (Communication protocol)
5 : ProfiBus (Communication protocol) --- 19 Rev0]

e = Option 3 : Additional Switches

0 : [without additional switches --- 16 Rev1]
1 : 2ALS (Additional Limit Switches)
2 : 2ATS (Additional Torque Switches)

f = Option 4 : Signal Lamp / 90° mounting Plate

0 : without LPA
1 : SLU (Signal Lamp Unit)
2 : LPA (Lever Plate Actuator 90°)
3 : SLU + LPA

g = Option 5 : Fire Proofing Actuator

0 : without FPA 1 / FPA 2
1 : FPA 1 (Fire Proofing Actuator : 1,050 ± 5℃ / 50min)
2 : FPA 2 (Fire Proofing Actuator : 250 ± 5℃ / 150min)

Appendix II: Wiring Diagram

HQ-008/010 Standard 1Ph.

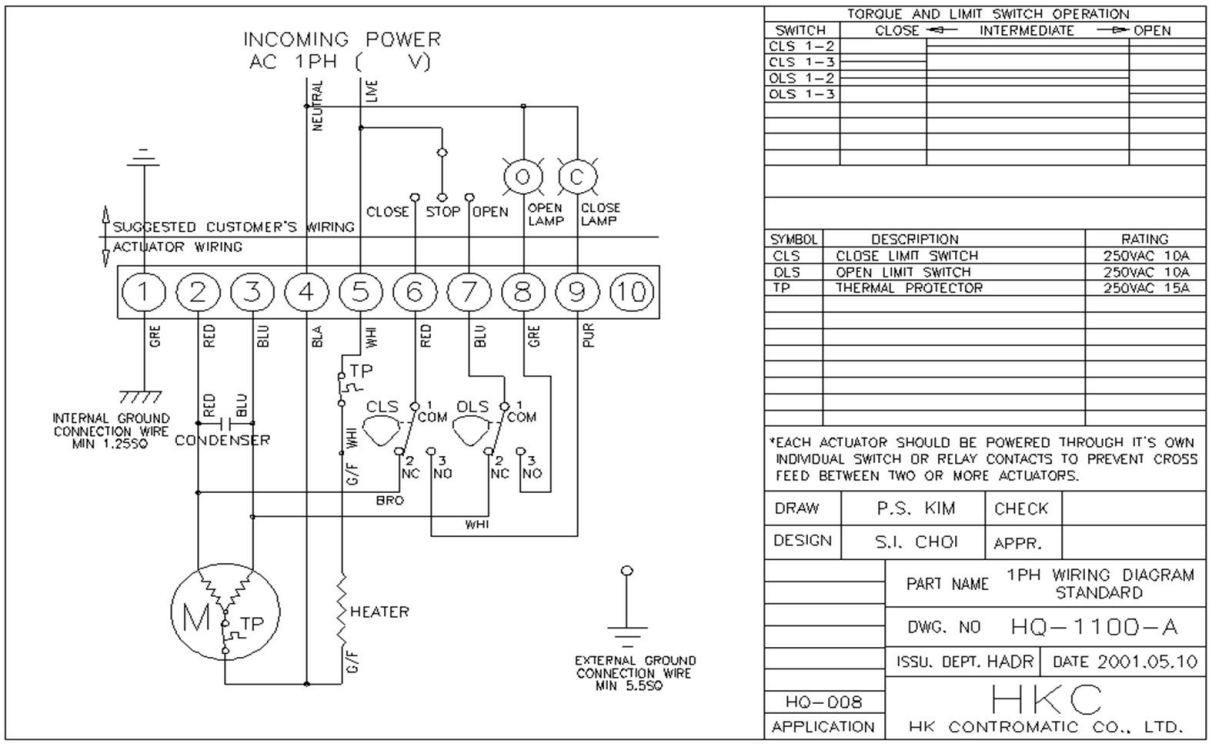

HQ-008/010 Standard DC

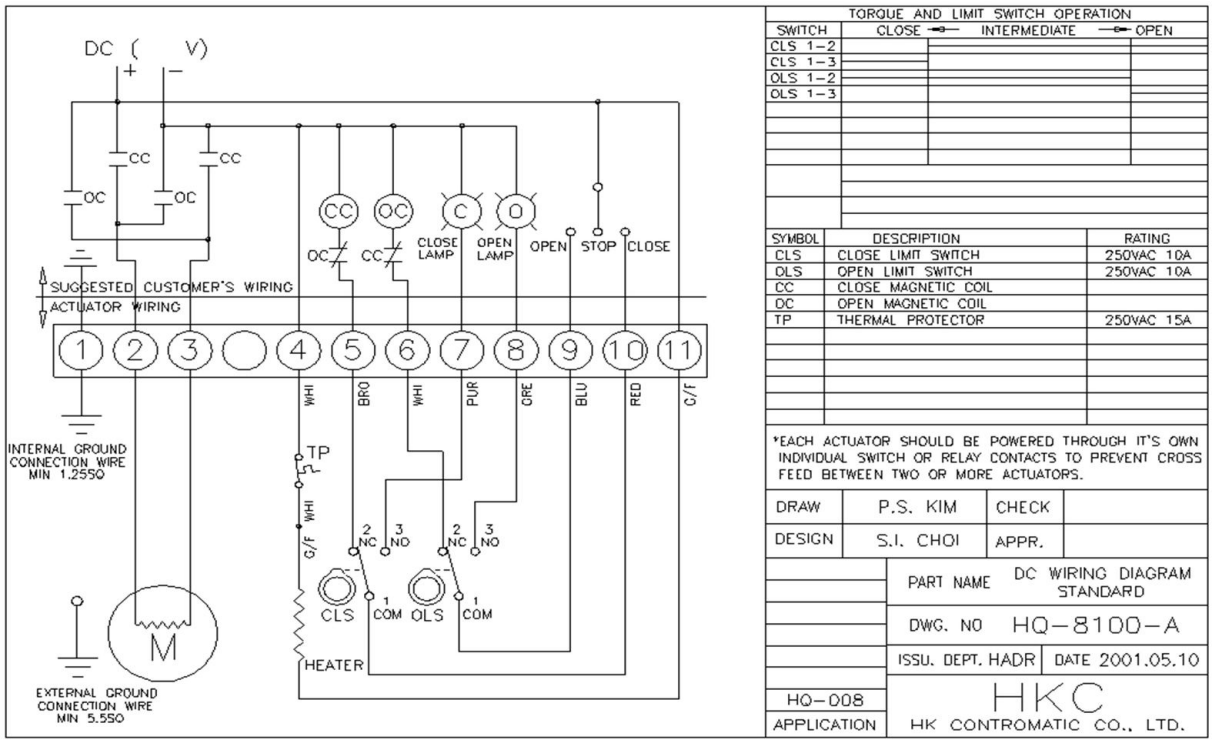

DANGER:

HAZARDOUS VOLTAGE. No electrical power should be connected until all wiring and limit switch adjustments have been completed.

HQ-015 ~ 300 Standard 1Ph.

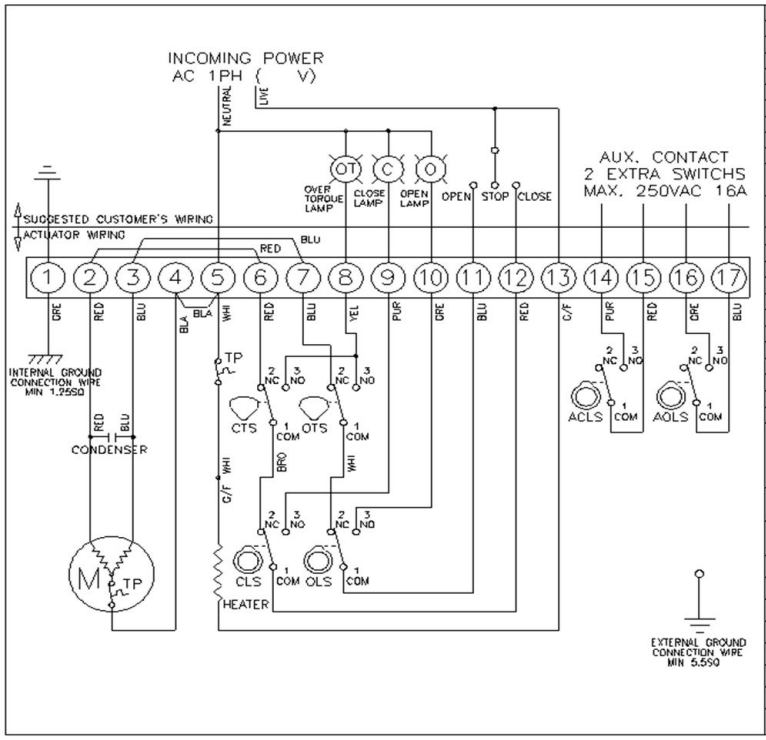

TORQUE AND LIMIT SWITCH OPERATION			
SWITCH	CLOSE ◄—	INTERMEDIATE	—► OPEN
CLS 1-2			
CLS 1-3			
OLS 1-2			
OLS 1-3			
ACLS1-2			
ACLS1-3			
AOLS1-2			
AOLS1-3			
CTS 1-3	* CLOSING TORQUE SWITCH INTERRUPTS CONTROL IF MECHANICAL OVERLOAD OCCURS DURING CLOSING CYCLE		
OTS 1-3	* OPENING TORQUE SWITCH INTERRUPTS CONTROL IF MECHANICAL OVERLOAD OCCURS DURING OPENING CYCLE		

SYMBOL	DESCRIPTION	RATING
CLS	CLOSE LIMIT SWITCH	250VAC 10A
OLS	OPEN LIMIT SWITCH	250VAC 10A
CTS	CLOSE TORQUE SWITCH	250VAC 10A
OTS	OPEN TORQUE SWITCH	250VAC 10A
ACLS	AUX. CLOSE LIMIT SWITCH	250VAC 16A
AOLS	AUX. OPEN LIMIT SWITCH	250VAC 16A
TP	THERMAL PROTECTOR	250VAC 15A

*EACH ACTUATOR SHOULD BE POWERED THROUGH IT'S OWN INDIVIDUAL SWITCH OR RELAY CONTACTS TO PREVENT CROSS FEED BETWEEN TWO OR MORE ACTUATORS.

DRAW	P.S. KIM	CHECK	
DESIGN	S.I. CHOI	APPR.	
	PART NAME	1PH WIRING DIAGRAM STANDARD	
HQ-200	DWG. NO	HQ-11000-A	
HQ-080	ISSU. DEPT. HADR	DATE 2001.05.10	
HQ-030	HKC		
HQ-015			
APPLICATION	HK CONTROMATIC CO., LTD.		

HQ-015 ~ 300 Standard 1Ph. PCU --- 17 Rev1]

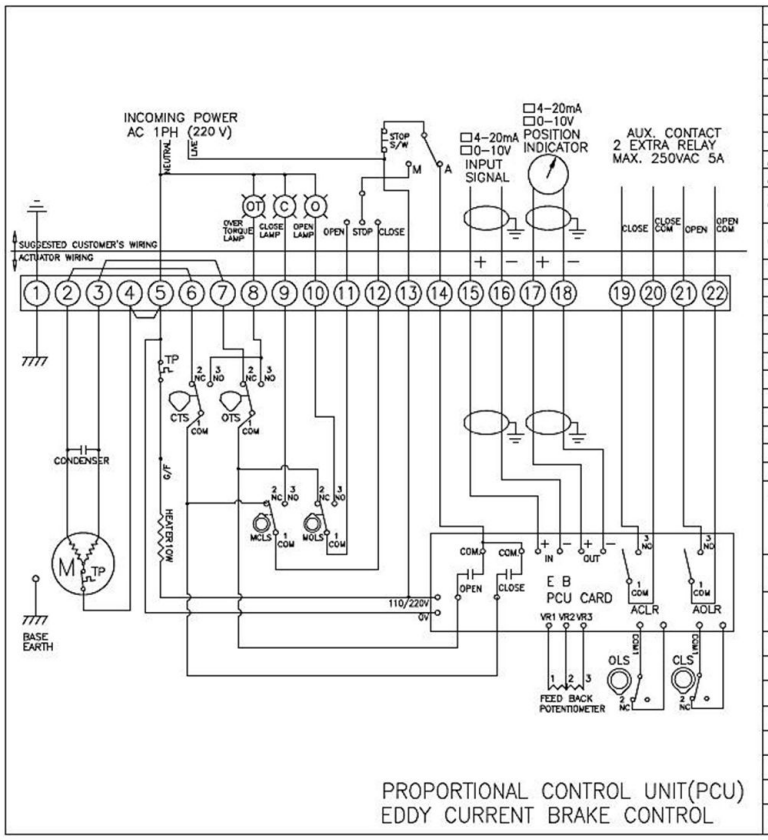

TORQUE AND LIMIT SWITCH OPERATION			
SWITCH	CLOSE ◄—	INTERMEDIATE	—► OPEN
CLS 1-2			
OLS 1-2			
MCLS1-2			
MCLS1-3			
MOLS1-2			
MOLS1-3			
ACLR1-3			
AOLR1-3			
CTS 1-3	* CLOSING TORQUE SWITCH INTERRUPTS CONTROL IF MECHANICAL OVERLOAD OCCURS DURING CLOSING CYCLE		
OTS 1-3	* OPENING TORQUE SWITCH INTERRUPTS CONTROL IF MECHANICAL OVERLOAD OCCURS DURING OPENING CYCLE		

SYMBOL	DESCRIPTION	RATING
CLS	CLOSE LIMIT SWITCH	250VAC 10A
OLS	OPEN LIMIT SWITCH	250VAC 10A
CTS	CLOSE TORQUE SWITCH	250VAC 10A
OTS	OPEN TORQUE SWITCH	250VAC 10A
ACLR	AUX. CLOSE LIMIT RELAY	250VAC 5A
AOLR	AUX. OPEN LIMIT RELAY	250VAC 5A
TP	THERMAL PROTECTOR	250VAC 15A
MCLS	MANUAL CLOSE LIMIT SWITCH	250VAC 10A
MOLS	MANUAL OPEN LIMIT SWITCH	250VAC 10A

*EACH ACTUATOR SHOULD BE POWERED THROUGH IT'S OWN INDIVIDUAL SWITCH OR RELAY CONTACTS TO PREVENT CROSS FEED BETWEEN TWO OR MORE ACTUATORS.

DRAW	H.C. HONG	CHECK	G.H. YANG
DESIGN	S.K. KANG	APPR.	S.M. HAN
	PART NAME	1PH WIRING DIAGRAM PCU	
HQ-350~	DWG. NO	HQ-15000-E	
HQ-200~	ISSU. DEPT. HADR	DATE 2017.07.21	
HQ-080~	HKC		
HQ-030~			
HQ-015~			
APPLICATION	HKC CO., LTD.		

DANGER:
HAZARDOUS VOLTAGE. No electrical power should be connected until all wiring and limit switch adjustments have been completed.

HQ-015 ~ 030 Standard DC

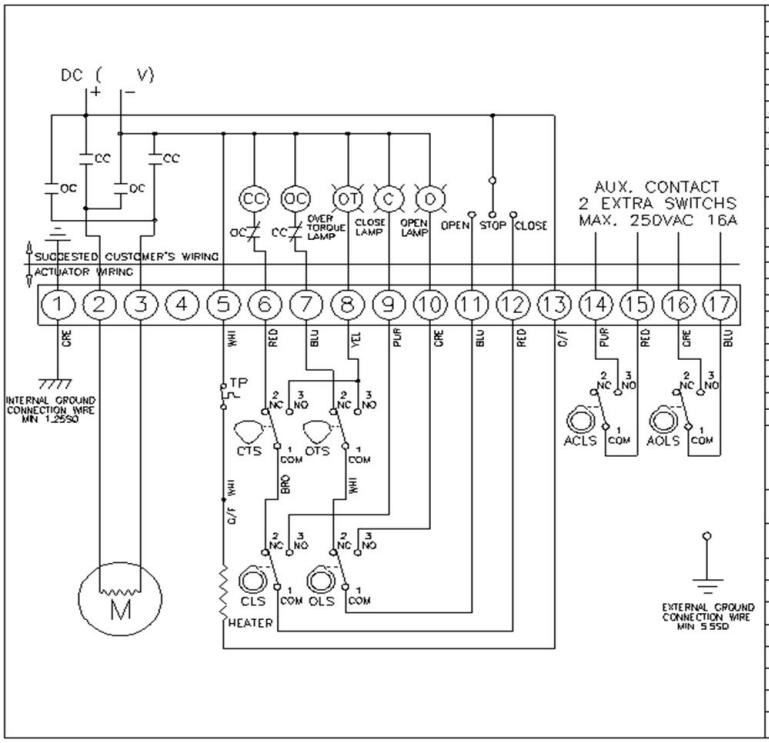

TORQUE AND LIMIT SWITCH OPERATION			
SWITCH	CLOSE	INTERMEDIATE	OPEN
CLS 1-2			
CLS 1-3			
OLS 1-2			
OLS 1-3			
ACLS 1-2			
ACLS 1-3			
AOLS 1-2			
AOLS 1-3			
CTS 1-3	* CLOSING TORQUE SWITCH INTERRUPTS CONTROL IF MECHANICAL OVERLOAD OCCURS DURING CLOSING CYCLE		
OTS 1-3	* OPENING TORQUE SWITCH INTERRUPTS CONTROL IF MECHANICAL OVERLOAD OCCURS DURING OPENING CYCLE		

SYMBOL	DESCRIPTION	RATING
CLS	CLOSE LIMIT SWITCH	250VAC 10A
OLS	OPEN LIMIT SWITCH	250VAC 10A
CTS	CLOSE TORQUE SWITCH	250VAC 10A
OTS	OPEN TORQUE SWITCH	250VAC 10A
ACLS	AUX. CLOSE LIMIT SWITCH	250VAC 16A
AOLS	AUX. OPEN LIMIT SWITCH	250VAC 16A
CC	CLOSE MAGNETIC COIL	
OC	OPEN MAGNETIC COIL	
TP	THERMAL PROTECTOR	250VAC 15A

*EACH ACTUATOR SHOULD BE POWERED THROUGH IT'S OWN INDIVIDUAL SWITCH OR RELAY CONTACTS TO PREVENT CROSS FEED BETWEEN TWO OR MORE ACTUATORS

DRAW	P.S. KIM	CHECK	
DESIGN	S.I. CHOI	APPR.	
	PART NAME	DC WIRING DIAGRAM STANDARD	
	DWG. NO	HQ-81000-A	
	ISSU. DEPT. HADR	DATE 2001.05.10	
HQ-030	HKC		
HQ-015			
APPLICATION	HK CONTROMATIC CO., LTD.		

HQ-015 ~ 030 Standard DC PCU --- 17 Rev1]

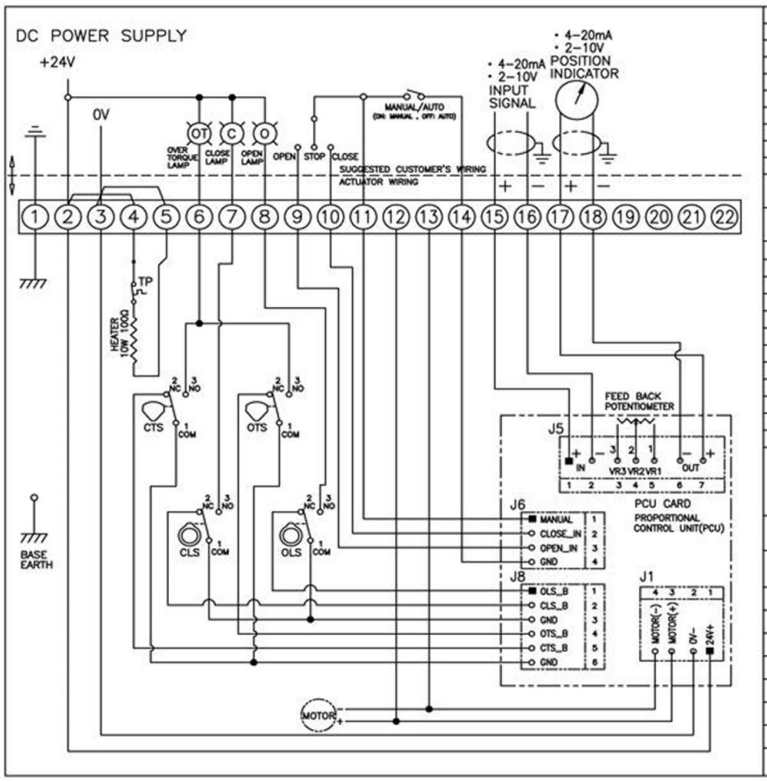

TORQUE AND LIMIT SWITCH OPERATION			
SWITCH	CLOSE	INTERMEDIATE	OPEN
CLS 1-2			
CLS 1-3			
OLS 1-2			
OLS 1-3			
CTS 1-3	* CLOSING TORQUE SWITCH INTERRUPTS CONTROL IF MECHANICAL OVERLOAD OCCURS DURING CLOSING CYCLE		
OTS 1-3	* OPENING TORQUE SWITCH INTERRUPTS CONTROL IF MECHANICAL OVERLOAD OCCURS DURING OPENING CYCLE		

SYMBOL	DESCRIPTION	RATING
CLS	CLOSE LIMIT SWITCH	250VAC 10A
OLS	OPEN LIMIT SWITCH	250VAC 10A
CTS	CLOSE TORQUE SWITCH	250VAC 10A
OTS	OPEN TORQUE SWITCH	250VAC 10A
TP	THERMAL PROTECTOR	250VAC 15A
■	FIRST PIN	

*EACH ACTUATOR SHOULD BE POWERED THROUGH IT'S OWN INDIVIDUAL SWITCH OR RELAY CONTACTS TO PREVENT CROSS FEED BETWEEN TWO OR MORE ACTUATORS.

DRAW	H.C. HONG	CHECK	S.C. NA
DESIGN	S.C. NA	APPR.	S.M. HAN
	PART NAME	DC WIRING DIAGRAM PCU	
	DWG. NO	HQ-85000-D	
HQ-030	ISSU. DEPT. HADR	DATE 2016.12.16	
HQ-020	HKC		
HQ-015			
APPLICATION	H K C CO., LTD.		

DANGER:

HAZARDOUS VOLTAGE. No electrical power should be connected until all wiring and limit switch adjustments have been completed.

NOTE: ***Each actuator is packed with individual box, and you can get the wiring diagram inside.***

Appendix III: Grounding

[HQ-008/010

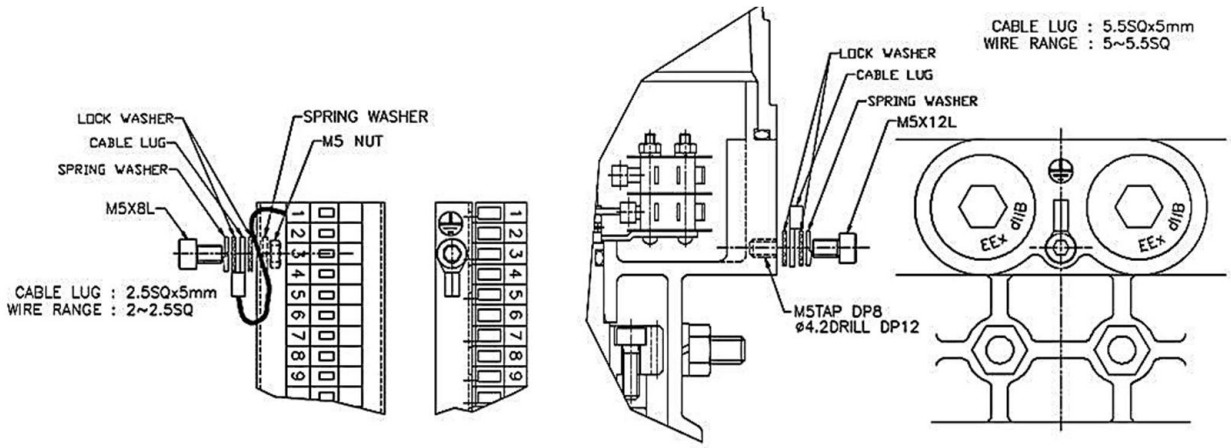

INTERNAL GROUND

EXTERNAL GROUND

(TERMINAL BLOCK #1 SHOULD BE USED
FOR INTERNAL GROUND.)

HQ-015 and bigger size

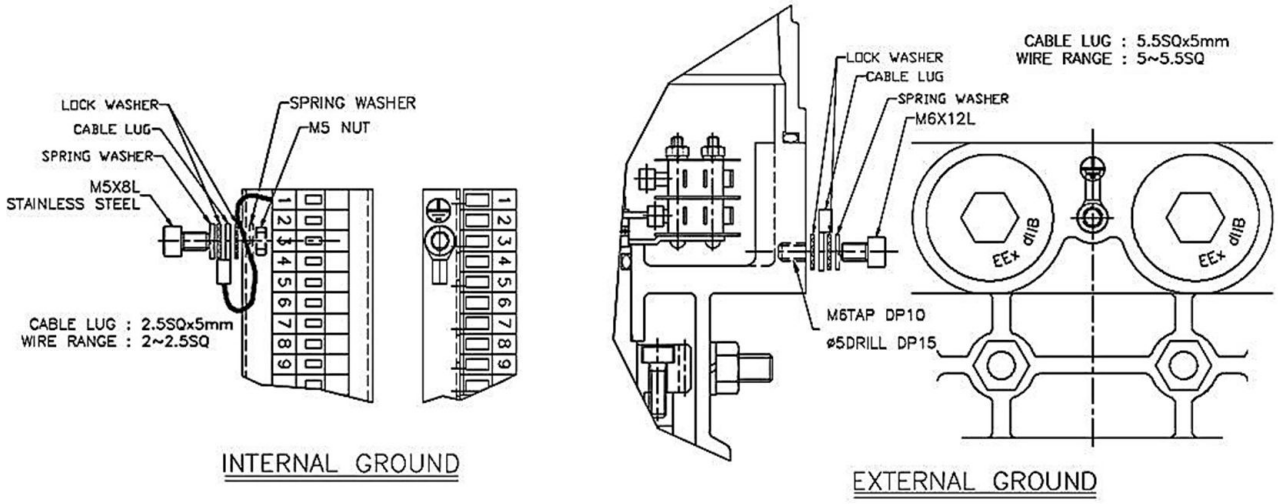

INTERNAL GROUND

EXTERNAL GROUND

(TERMINAL BLOCK #1 SHOULD BE USED
FOR INTERNAL GROUND.)

------ 19 Rev0]

HKC Co., Ltd. 26, Emtibeui 28-ro, Siheung-si, Gyeonggi-do, 15119, Republic of Korea
Head Office & Plant: Tel) +82-31-488-8266, Fax) +82-31-488-8269
Fax) Overseas sales office: +82-31-488-9622, Domestic sales office: +82-31-319-8267
Website www.hkcon.co.kr