DIMENSIONS AND TECHNICAL DETAILS — HQ-004/HQ006

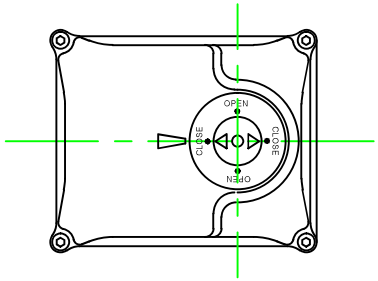

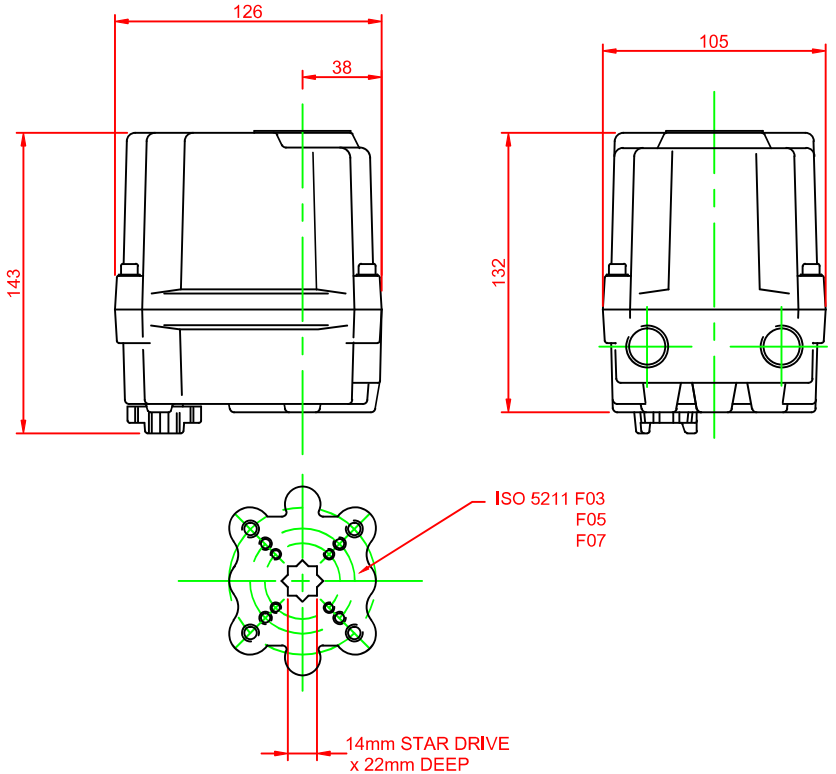

Description:

The HQ-004 & HQ-006 electric actuators are specially designed for quarter turn applications such as small ball, butterfly, plug valves and dampers.

Small, light and compact design with high ouput torques.
Various control options and a wide range of voltages are available to meet your specific requirements.

High quality electrical components and alloy gearing ensure reliability and extended life span.

The Actuator housing is Hard Anodised inside & out prior to painting to increase corrosion resistance.

Standard Specification:

Enclosure	:	Weatherproof IP67
Power Supply	:	110/220v 50/60Hz, 24vAC/DC
Duty Cycle (On/Off Duty)	:	S2 35%
Motor	:	Reversible Motor
Limit Switches	:	2 x SPDT, 250V AC 3A
Additional Limit Switches	:	2 x SPDT, 250V AC 3A
Space Heater	:	2W (110/220V AC)
Manual Override	:	Hexagon
Conduit Entries	:	2 x M20
Movement Angle	:	320° ± 10° (0° to 320°)
Ambient Temperature	:	-20°C to 70°C
External Coating	:	Dry Powder, Polyester
Motor Class	:	F

Option Specification:

Enclosure	:	Waterproof IP68
Conduit Entries	:	2 x PG 13.5, 1/2" NPT
PIU *	:	Potentiometer Unit (1K - 10K)
PCU *	:	Proportional Control Unit (In/Out:0-10V,4-20mA)
CPT *	:	Current Position Transmitter (Output 4-20mA DC)
LCU-D *	:	Local Control Unit (Remote/Open/Stop/Close s/w)
EXA *	:	Explosion Proof Enclosure ATEX II2G EEXD IIB T4

* HQ-006 ONLY

Performance

TYPE (MODEL)	MAXIMUM OUTPUT TORQUE	OPERATING TIME 50/60Hz	RATED CURRENT (A)				WEIGHT
			AC 1PH . 50/60Hz			DC	
		90°	24V	110V	220V	24V	Kg
HQ-004	40Nm	14/12 SECS	1.7	0.4/0.4	0.2/0.2	1.7	3
HQ-006	60Nm						

DATA SHEET No. 3.01

ISSUE DATE APR 2017

ISSUE REF D

DOC: DS-01 1-9-2008

Electric Quarter Turn Actuator
HQ-005

Features



- Multi voltage design (Single phase & 24VAC/DC)
- High corrosion resistance, anodized & painted housing
- 4 off Limit switches
- Torque output: 50 Nm
- low current, long-life actuator due to unique brushless DC motor ensuring high reliability
- 2 off M20 cable entries
- IP67 weatherproof enclosure
- F03/F04/F05/F07 mounting base with 14mm Star drive
- Captive cover bolts
- Visual beacon indicator & LED lamps
- 70% Duty Rating (on/off only)
- Declutchable manual override handwheel
- Electronic torque limiter

Description

HQ005 Electric actuator is specially designed for small quarter turn valves, such as ball, butterfly, plug valves, dampers and other similar usages. The actuator housing is made from high grade aluminum die cast which is robust and light weight. To provide high corrosion resistance, the housing is hard anodized inside & outside prior to being polyester coated. The actuator is fitted with manual override handwheel and declutch system for use when power is lost or in an emergency.

Options include 4-20mA/0-10VDC input/output modulating positioner card for all voltages and rechargeable battery backup for failsafe functionality. A set of high-quality lithium batteries are constantly trickle charged ensuring optimum performance anytime there is a power failure. The actuators can be easily set to fail closed or open and a charge status LED indicates battery health. All options are fitted within the standard housing.

Design Construction

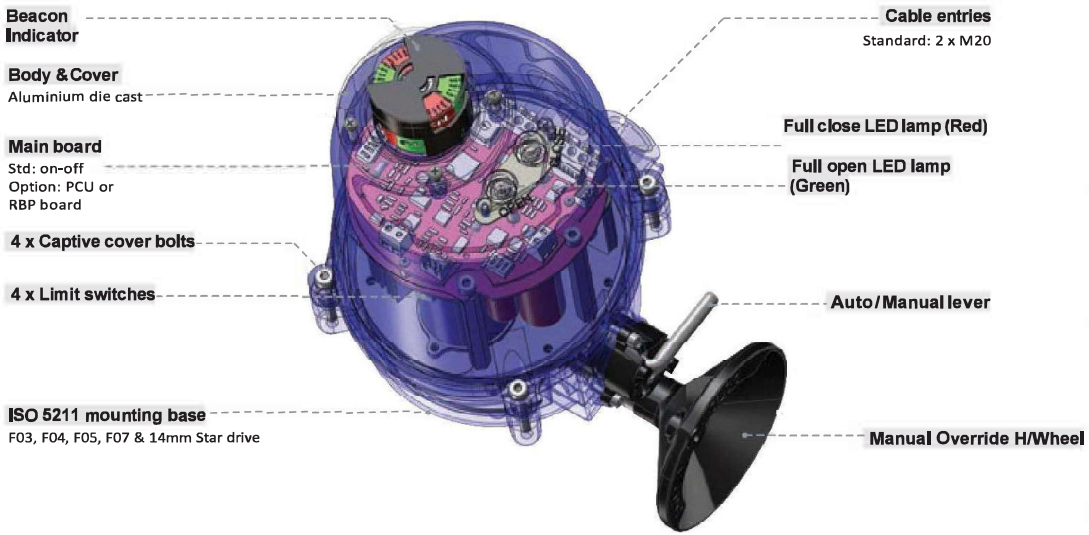

Performance Data

Model	Max. output torque		Operating time 50/60 Hz	Mounting base	Motor Stall Current	Rated current (A)			Duty cycle IEC34-1		Weight
						1 phase, 50/60 Hz		24 VAC/DC			
	kgf.m	NM	90°	ISO 5211		110 VAC	220 VAC		S4	S2	kg
HQ-005	5	50	13 sec	F03, F04, F05, F07	1 A	0.2 A	0.1 A	0.8 A	70 %	50 %	2.6

Standard Specification

Enclosure	Weatherproof enclosure IP67
Power supply	85 - 265 VAC 1 ph, 50/60 Hz | 24 VAC/DC
Duty cycle	S4: 70% (average load of 80% Max. torque) S2: 50% (average load of 80% Max. torque)
Motor	BLDC motor
Limit switches	2 x open/close, SPDT, 250 V ac 10 A rating
Additional limit switches	2 x open/close, SPDT, 250 V ac 10 A rating
Anti-condensation board	2 W
Manual override	Manual Handwheel
Cable entries	2 x M20
Standard Rotation	90° ± 10°
Ambient temperature	-20 to +70 °C

Optional Specification

PIU	Potentiometer unit (1-10 kΩ)
PCU	Proportional control unit (in/out: 0-10V or 4-20 mA)
RBP	Rechargeable Battery Backup
WTA	Watertight enclosure actuator (IP68 10 m 72 hr)
EXT	Extended Rotation (0 – 270°)
TS	Torque overload indicator via flashing LED module

Dimensional Drawing

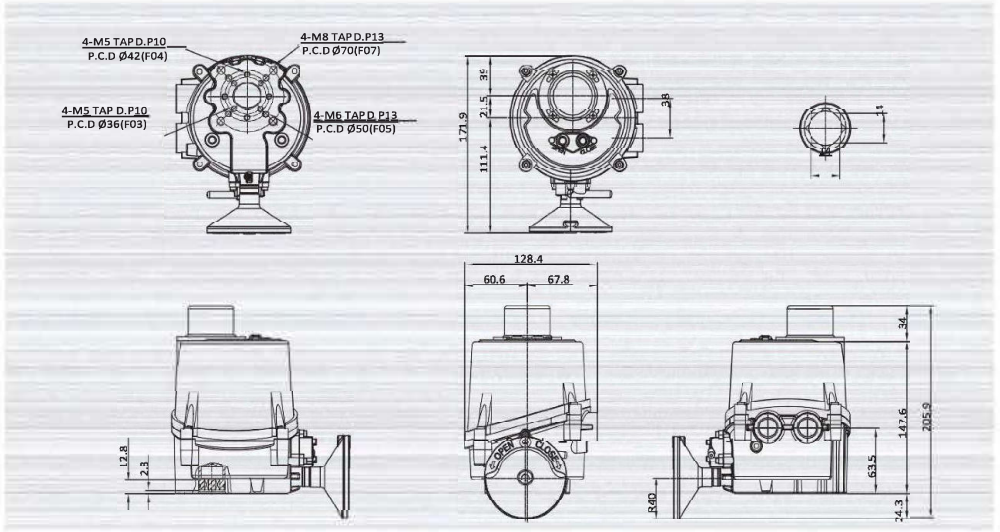

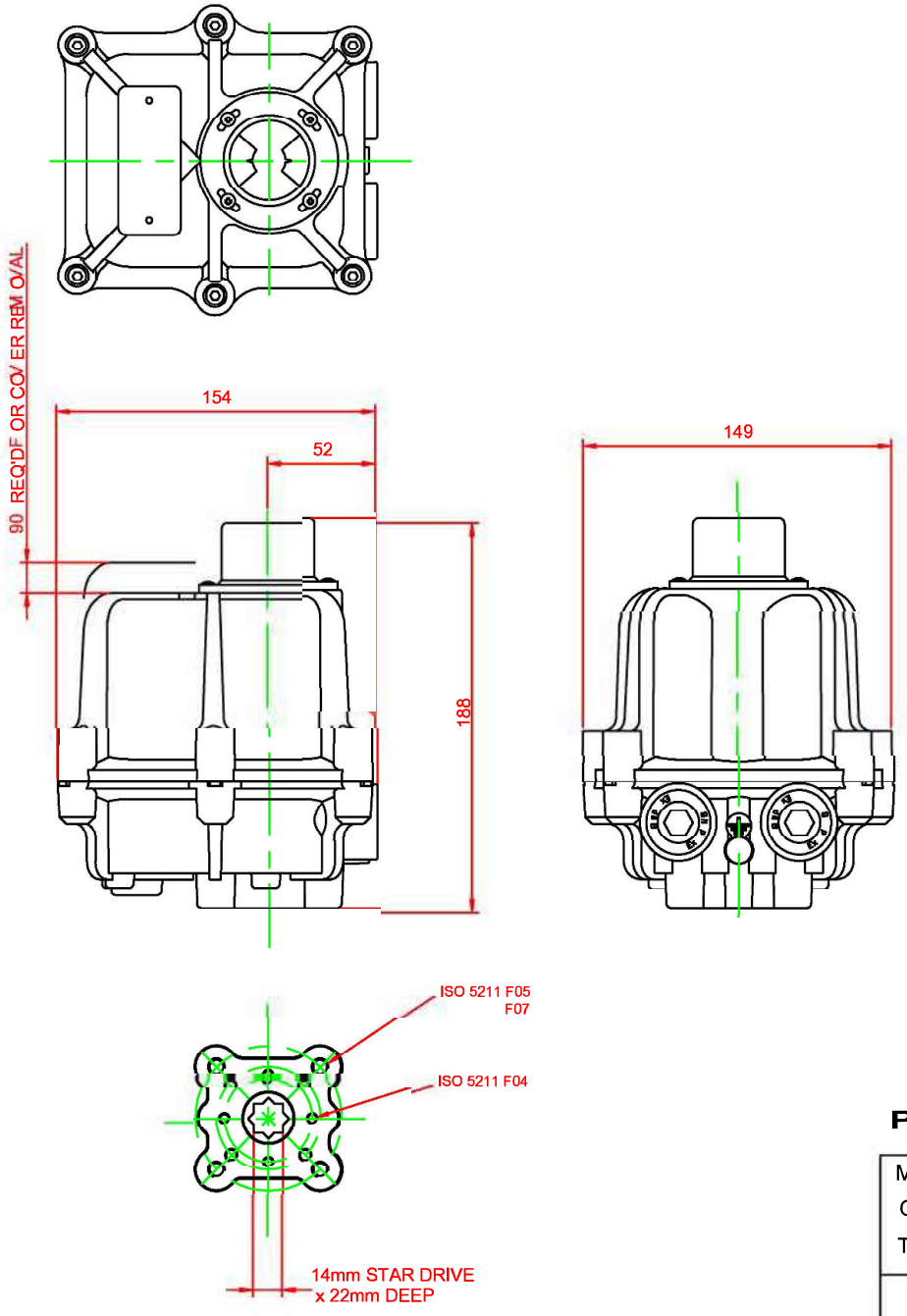

Description:

The HQ-006 Atex electric actuators are specially designed for quarter turn applications such as small ball, butterfly, plug valves and dampers fitted within a hazardous area.

Small and compact IP67 design with 60Nm ouput torque and a wide range of voltages.

High quality electrical components and alloy gearing ensure reliability and extended life span.

As standard, the actuator is fitted with 4 off limit switches, anti-condensation heater, high visibility beacon indicator and an allen key operated manual override.

The Actuator housing is Hard Anodised inside & out prior to painting to increase corrosion resistance.

Standard Specification:

Enclosure	:	Atex Ex II 2 G Ex d IIB T4 Gb (Gas only)
Power Supply	:	110/220v 50/60Hz, 24vAC/DC
Duty Cycle (On/Off Duty)	:	S2 35%
Motor	:	Reversible Motor
Limit Switches	:	2 x SPDT, 250V AC 3A
Additional Limit Switches	:	2 x SPDT, 250V AC 3A
Space Heater	:	2W (110/220V AC)
Manual Override	:	Allen Key Operated
Conduit Entries	:	2 x M20
Movement Angle	:	320° ± 10° (0° to 320°)
Ambient Temperature	:	-20°C to 60°C
External Coating	:	Dry Powder, Polyester
Motor Class	:	F

Performance

MAXIMUM OUTPUT TORQUE	OPERATING TIME 50/60Hz	RATED CURRENT (A)				WEIGHT
		AC 1PH . 50/60Hz			DC	
	90°	24V	110V	220V	24V	Kg
60Nm	14/12 SECS	1.7	0.4/0.4	0.2/0.2	1.7	4.5

DIMENSIONS AND TECHNICAL DETAILS HQ-006 ATEX

DATA SHEET No. 3.01.1

ISSUE DATE MAR 2025

ISSUE REF B

DOC: DS-01 1-9-2008

DIMENSIONS AND TECHNICAL DETAILS HQ008 - HQ120

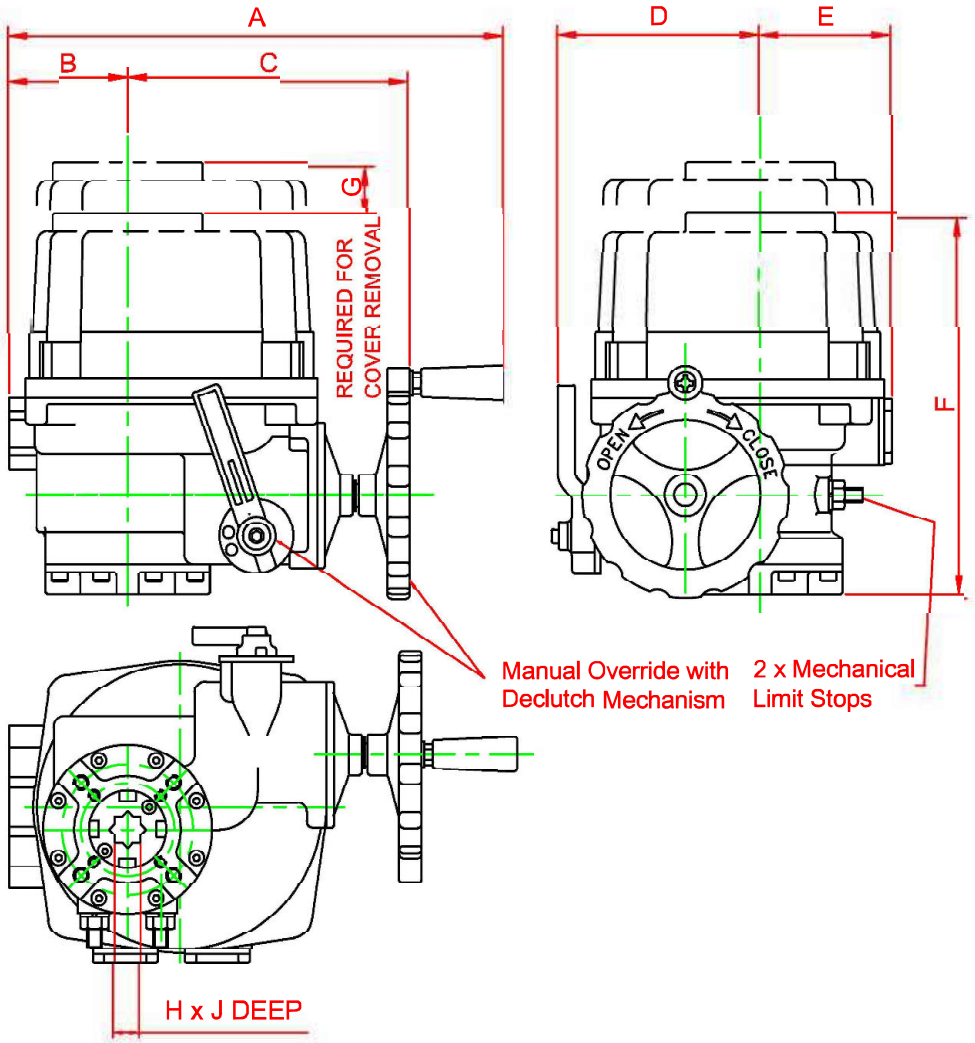

DRIVE BUSH CAN BE MACHINED TO SUIT MOST VALVE STEMS (ON REQUEST)

Dimensions:

MODEL	BASE	A	B	C	D	E	F	G	H	J
HQ008	F07	265	57	157	116	77	235	120	14	40
HQ015	F07/F10	348	83	200	142	93	268	160	17	45
HQ020	F07/F10	348	83	200	142	93	268	160	17	45
HQ030	F10/F12	378	92	221	160	105	290	180	22	52
HQ050	F10/F12	378	92	221	160	105	290	180	22	52
HQ060	F10/F12	378	92	221	160	105	290	180	27	52
HQ060 24v	F12/F14	419	112	242	191	113	330	210	27	60
HQ080	F12/F14	419	112	242	191	113	330	210	27	60
HQ120	F12/F14	419	112	242	191	113	330	210	36	60

Description:

The HQ008 to HQ120 electric actuators are specially designed for quarter turn applications such as ball, butterfly, plug valves and dampers.

With a wide range of output torques and control options the HQ series electric actuator can be configured to meet the demands of any site specification.

High quality electrical components,alloy gearing and a high pressure die cast aluminium housing ensure reliability and extended life span.

Standard Specification:

Enclosure	:	Weatherproof IP67 (IP68 Option)
Power Supply	:	110/220v 50/60Hz,24vAC/DC,380/440V 3Phase
Duty Cycle (On/Off Duty)	:	S4, 70% Standard, 100% for max 30 mins
Motor	:	Squirrel Caged Induction Motor
Limit Switches	:	4 x SPDT, 250V AC 10A
Torque Switches	:	2 x SPDT, 250vAC 10A (HQ015-HQ120)
Space Heater	:	10W(110/220VAC) Anti Condensation
Conduit Entries	:	2 x M25 (PG13.5 OR 1/2"NPT OPTION)
Travel Angle	:	90° ± 5°
Ambient Temperature	:	-20°C to +70°C On/Off, -20° to +55° Modulating
External Coating	:	Hard Anodised before Dry Powder Polyester Coating

Option Specification:

PIU	:	Potentiometer Unit (1K - 10K)
PCU	:	Proportional Control Unit (In/Out: 0-10VDC,4-20mA)
CPT	:	Current Position Transmitter (Output 4-20mA)
LCU-B	:	Local Control Unit (Remote/Open/Stop/Close switch)
EXA	:	Explosion Proof: ATEX II 2GD Eexd IIB T4
		Dust Ignition Proof: Ex tb IIIC T135°C
FPA	:	Fire Proof Actuator. 250°C/150 min
RBP	:	Rechargeable Battery Back up for Fail Safe
MRCT	:	Speed Control Card

Performance:

MODEL		HQ008	HQ015	HQ020	HQ030	HQ050	HQ060	HQ080	HQ120
TORQUE (Nm)		80	150	200	300	500	600	800	1200
SPEED 90° 50/60Hz		16/13	25/21	25/21	31/26	31/26	31/26	34/28	34/28
CURRENT (A) MAX	110/1/50	1.2	2.1	2.2	2.4	4.2	4.4	5.7	6.9
	220/1/50	0.6	1	1.1	1.3	1.9	2	2.8	3
	380/3/50	0.2	0.6	0.7	0.6	0.9	1	1.3	1.5
	24V AC/DC	3.7	5.3	6.5	8.6	-	7.0	8.6	8.6
WEIGHT (Kg)		6	15	15	19	20	20	26	26
MAX. SQ. DRIVE		17	19	19	30	30	40	40	40

DATASHEET No. 3.02

ISSUE DATE AUG 2025

ISSUE REF J

DO C:D S01 1-92008

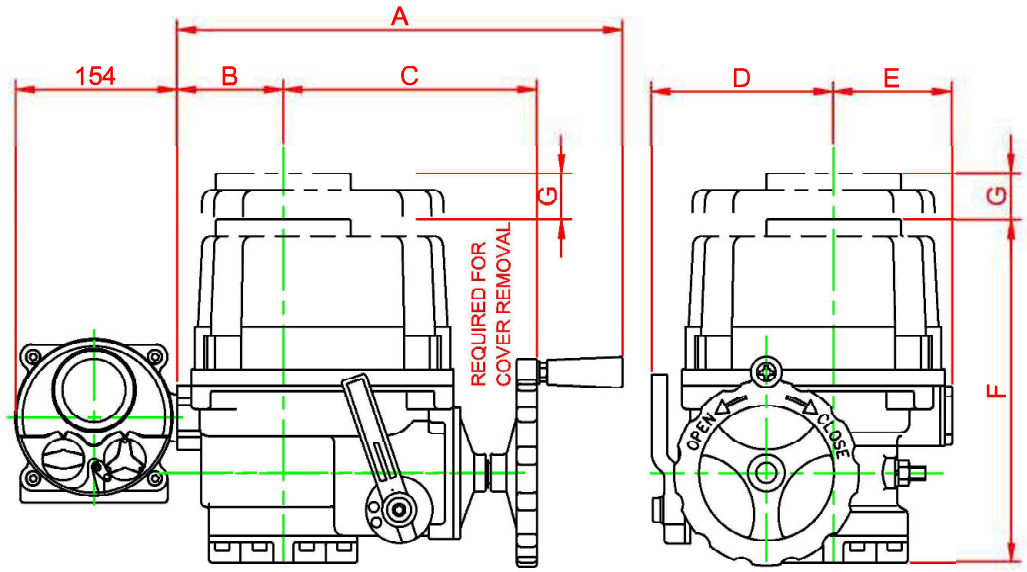

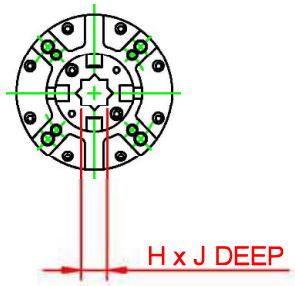

Description:

The HQ008 to HQ120 electric actuators with the addition of an integral failsafe battery backup module. The actuators can be configured to fail close or fail open on loss of power. The power pack has sufficient reserve to allow up to five operations within one hour of the power loss. The integral battery module also includes controls for local operation with a padlockable Remote/Local selector, the front panel incorporates LED indicators for the battery charge status and valve close/open position.

Standard Specification:

Enclosure	:	Weatherproof IP67 (IP68 Option)
Power Supply	:	110/220v 50/60Hz
Duty Cycle (On/Off Duty)	:	S4, 70% Standard, 100% for max 30 mins
Motor	:	Squirrel Caged Induction Motor
Limit Switches	:	4 x SPDT, 250V AC 10A
Torque Switches	:	2 x SPDT, 250vAC 10A (HQ015-HQ030)
Space Heater	:	10W(110/220VAC) Anti Condensation
Conduit Entries	:	2 x M25 (PG13.5 OR 1/2"NPT OPTION)
Travel Angle	:	90° ± 5°
Ambient Temperature	:	-20°C to +40°C
External Coating	:	Hard Anodised before Dry Powder Polyester Coating

Option Specification:

PIU	:	Potentiometer Unit (1K - 10K) (HQ015 upward)
PCU	:	Proportional Control Unit (In/Out: 0-10VDC,4-20mA) (HQ015 upward)
CPT	:	Current Position Transmitter (Output 4-20mA) (HQ015 upward)

Dimensions:

MODEL	BASE	A	B	C	D	E	F	G	H	J
HQ008	F07	265	57	157	116	77	235	120	14	40
HQ015	F07/F10	348	83	200	142	93	268	160	17	45
HQ020	F07/F10	348	83	200	142	93	268	160	17	45
HQ030	F10/F12	378	92	221	160	105	290	180	22	52
HQ060	F12/F14	378	92	242	160	105	330	210	27	60
HQ080	F12/F14	419	112	242	191	113	330	210	27	60
HQ120	F12/F14	419	112	242	191	113	330	210	36	60

DRIVE BUSHES CAN BE MACHINED TO SUIT MOST VALVE STEMS (ON REQUEST)

Performance:

MODEL	HQ008	HQ015	HQ020	HQ030	HQ060	HQ080	HQ120
TORQUE (Nm)	80	150	200	300	600	800	1200
SPEED 90° 50/60Hz	16/13	25/21	25/21	31/26	31/26	34/28	34/28
CURRENT 110/1/50	1.2	2.1	2.2	2.4	4.4	5.7	6.9
(A) MAX 220/1/50	0.6	1	1.1	1.3	2	2.8	3
WEIGHT (Kg)	14	21	21	25	32	38	38
MAX. SQ. DRIVE	17	19	19	30	40	40	40

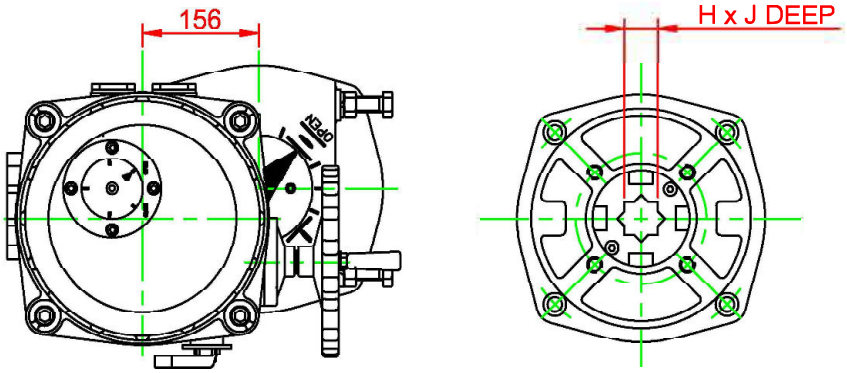

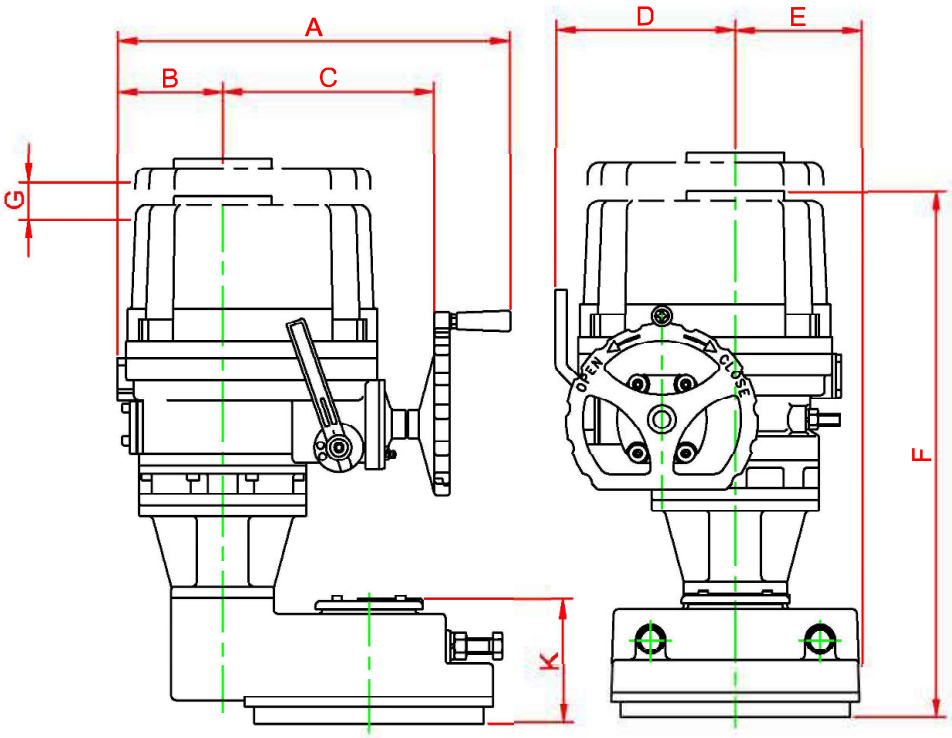

Description:

The HQ200 and HQ300 electric actuators are specially designed for quarter turn applications such as ball, butterfly, plug valves and dampers.
With a wide range of control options the HQ series electric actuator can be configured to meet the demands of any site specification.
High quality electrical components,alloy gearing and a high pressure die cast aluminium housing ensure reliability and extended life span.

Standard Specification:

Enclosure	:	Weatherproof IP67 (IP68 Option)
Power Supply	:	110/220v 50/60Hz,380/440V 3Phase
Duty Cycle (On/Off Duty)	:	S2, 20 - 50% Max 10 - 30 Min
Motor	:	Squirrel Caged Induction Motor
Limit Switches	:	4 x SPDT, 250V AC 10A
Torque Switches	:	2 x SPDT, 250vAC 10A
Space Heater	:	20W(110/220VAC) Anti Condensation
Conduit Entries	:	2 x M25 (PG13.5 OR 1/2"NPT OPTION)
Travel Angle	:	90° ± 5°
Ambient Temperature	:	-20°C to +70°C On/Off, -20° to +55° Modulating
External Coating	:	Hard Anodised before Dry Powder Polyester Coating
Manual Override	:	Handwheel with Declutch Mechanism

Option Specification:

PIU	:	Potentiometer Unit (1K - 10K)
PCU	:	Proportional Control Unit (In/Out: 0-10VDC,4-20mA)
CPT	:	Current Position Transmitter (Output 4-20mA)
LCU-B	:	Local Control Unit (Remote/Open/Stop/Close switch)
EXA	:	Explosion Proof Enclosure. ATEX II 2G Eexd IIB T4
FPA	:	Fire Proof Actuator. 250°C/150 min
MRCT	:	Speed Control Card

Dimensions:

MODEL	BASE	A	B	C	D	E	F	G	H **	J	K
HQ200	F14*/F16	419	112	242	191	133	563	210	36	95	133
HQ300	F14*/F16	419	112	242	191	133	563	210	46	95	133

* ON REQUEST ** CAN BE MACHINED TO SUIT MOST VALVE STEMS (ON REQUEST)

Performance:

MODEL		HQ200	HQ300
TORQUE (Nm)		2000	3000
SPEED 90° 50/60Hz		112/93	112/93
CURRENT (A) MAX	110/1/50	5.7	6.9
	220/1/50	3.1	3
	380/3/50	1.7	1.8
WEIGHT (Kg)		72	72
MAX. SQ. DRIVE		55	55

DIMENSIONS AND TECHNICAL DETAILS HQ200 - HQ300

DATA SHEET No. 3.03

ISSUE DATE AUG 2025

ISSUE REF E

DOC: DS-01 1-9-2008