SIRCA
INTERNATIONAL S.P.A.



AP/APM series
Pneumatic Rotary Actuators

OUR PRODUCTION

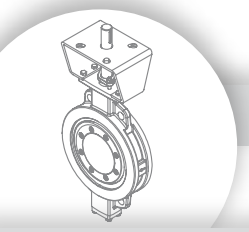

501M series - Triple Eccentric Metal Seated Butterfly Valves

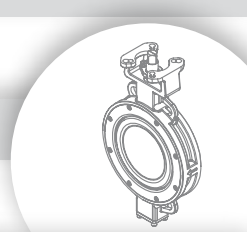

401N series - Double Eccentric Butterfly Valves

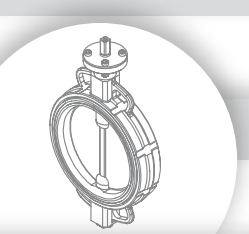

301 / 301E series - Butterfly Valves with rubber seat

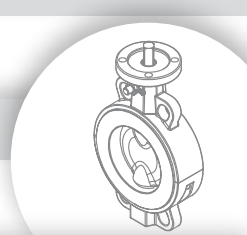

301TSS / 301TT series - Butterfly Valves with PTFE lined

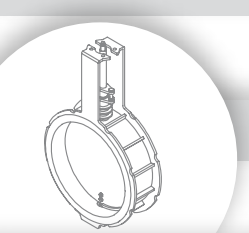

HT600 series - Damper valves for high temperature

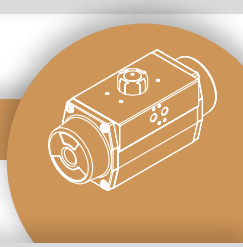

AP / APM series - Pneumatic Rotary Actuators

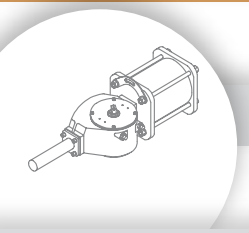

APG series - Schotch Yoke Pneumatic Actuators

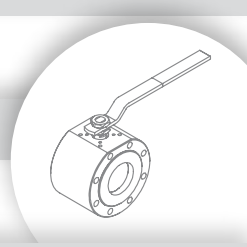

S10 series - Wafer Flat Body Ball Valves

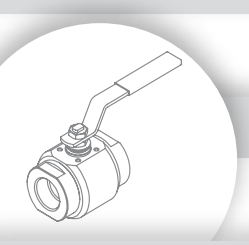

S20 series - Two-pieces 800 p.s.i. Ball Valves

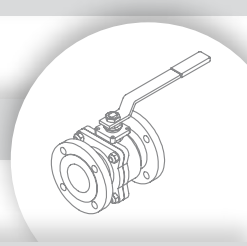

S30 series - Split Body Ball Valves

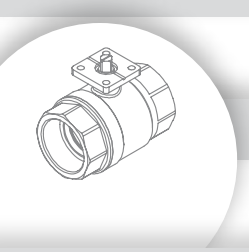

S40, S50, S60, S70, S80 series - Threaded actuated and manual ball valves

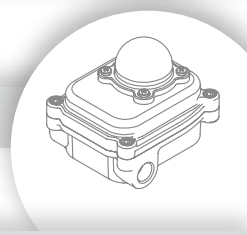

MBX series - Limit Switch Box

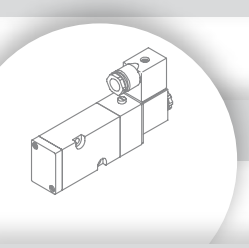

SVS series - Solenoid valve 5/2 or 3/2 way

ACCESSORIES

JIRCA INTERNATIONAL S.P.A.



Sirca International SpA was founded in the late seventies, and started doing business as a manufacturer of complete automation and pneumatic regulation systems.
Our flagship product is rotating pneumatic quarter-turn actuators which are compact, lightweight and highly reliable.

Subsequently, our company entered the Italian market with the production and sale of rubber-seated butterfly valves, double eccentric butterfly valves, ball valves and check valves.
In time at Sirca International we began marketing and producing accessories to actuate, control and regulate valves. These were installed on our own valves and actuators in order to offer our customers complete “assemblies” that are capable of meeting the most varied system requirements.

Beginning in the 1990s, our company began looking at foreign markets and in a short time we started exporting more than 60% of our production.
This type of market development requires continuous product innovation as well as continuous effort to maintain product competitiveness and quality.
With this motivation and these objectives, with the arrival of the new millenium we at Sirca International began designing and producing the triple eccentric butterfly valve metal-seated that are currently top of the range of the valves produced at Sirca.

The main strong points of Sirca International SpA lie in our product quality, competitive price, large warehouse stocks and in the reliability of our services. These confirm our status as a Leading Company on the national and international markets.

Constructive features

AP type

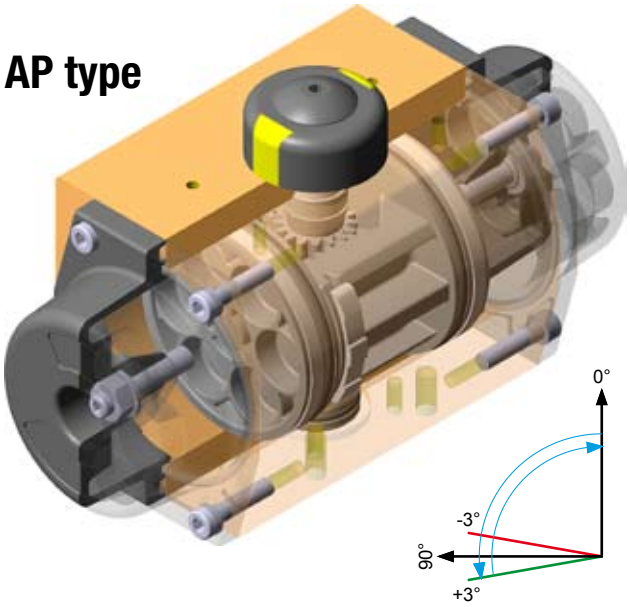

APM type

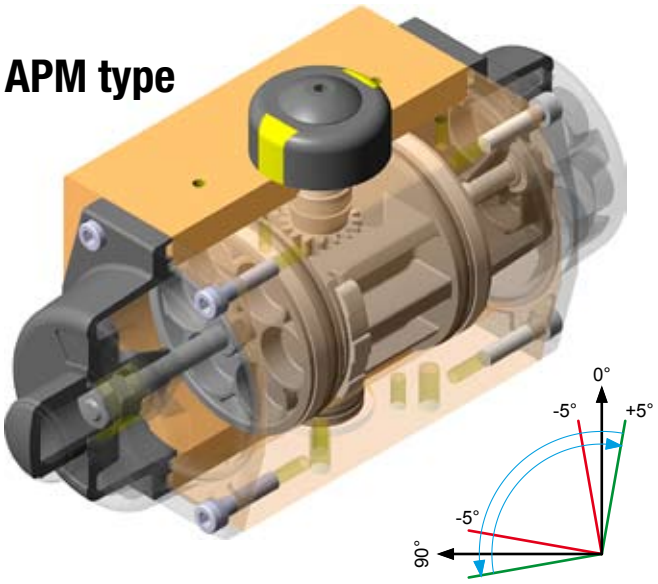

Two type of model: **AP** and **APM** series.

AP series, with single adjustment, allows only the adjustment of the stroke of the pistons in opening position 90° ± 3°.

APM series, with double adjustment, allows to adjust the stroke of the pistons in closing and opening of ± 5°.

Dual piston rack and pinion design for compact construction, symmetric mounting piston. One compact design with identical body and end caps for double acting and spring return model.

Extruded aluminium body, available with two types of corrosion protection, gold anodised or hard anodised. All bodies are machined with CNC controlled machines in order to obtain the highest quality and precision.

End caps and pistons are made of die-cast aluminum. End caps are painted.

Pinion is made in nickel plated steel alloy. An anti-blowout system prevents the stem from slipping out of the actuator body.

All moving components, are equipped with special anti-friction rings or bearing.

All springs are made with an encapsulated system that avoids the risk of accidents during the disassembly phases of the actuator.

Internal and external stainless steel fasteners for long term corrosion resistance.

Conform to technical specifications:
ISO 5211, DIN3337 and VDI / VDE 3845 NAMUR for product interchangeability and easy mounting of solenoids valve, limit switches and other accessories.

Mounting variation

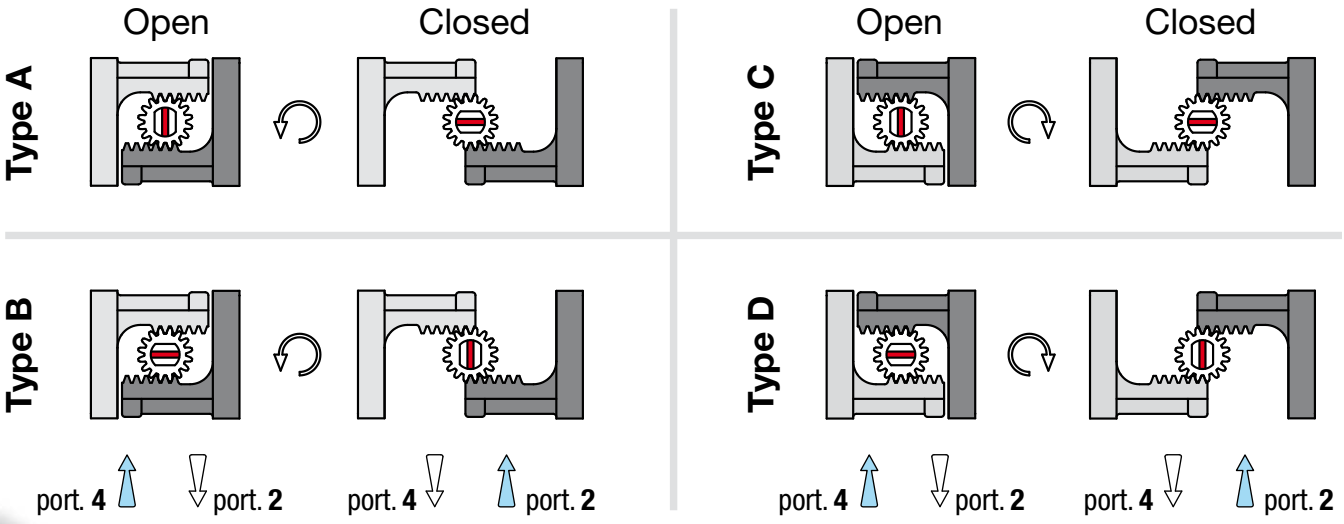

Principle of operation DA

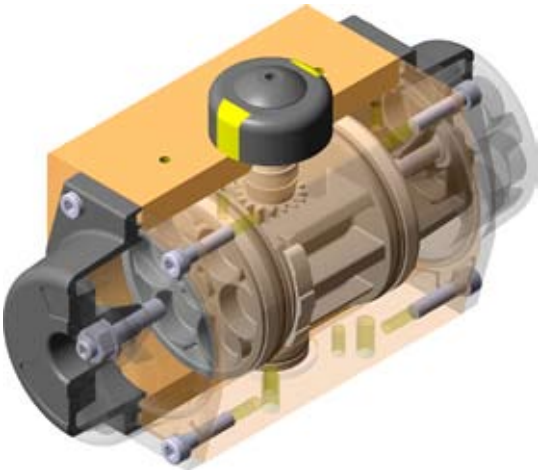

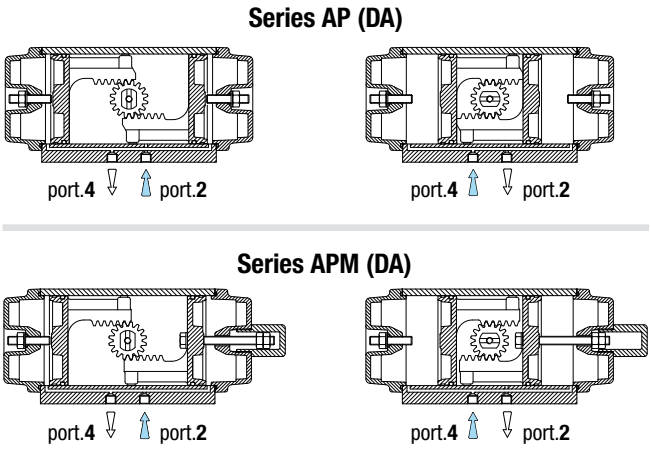

DOUBLE ACTING ACTUATOR (DA)

Counter clockwise output operation is achieved by inserting pressure into **Port '2'**, to force the pistons apart thus rotating the actuator pinion counter clockwise. During the operation, air from the outer chambers is exhausted through **Port '4'**. Clockwise output operation is achieved by reverse of the above and inserting pressure into **Port '4'**.

DATA REQUIRED FOR ACTUATOR SIZING

1) Valve torque (min. 25% safety recommended).
2) Double acting or spring return operation.
3) Minimum available operating pressure.

SELECTION OF DOUBLE ACTING ACTUATORS (DA)

Determine the required valve torque, this should include 25% safety margin, and the minimum operating pressure available. Refer to the pressure/torque table abd select the minimum pressure column applicable. Follow this column down until a value not less than that required is found. Next read across to the left hand column and read the model number to be ordered.
EXAMPLE: Valve torque 80Nm plus 25% = 100 Nm Minimum operating pressure 5 bar. By reading down the 5 bar column a figure without below 119 Nm is 123 Nm The model number therefore shown in the left hand column is AP4DA.

REMARK: the chosen torque valve, which fixes the type of actuator, has never to be lower than the requested torque value of the valve.

DOUBLE ACTING TORQUE RATINGS (DA)

		OPERATING PRESSURE						
MODEL	bar / p.s.i.	2 / 30	3 / 44	4 / 58	5 / 73	6 / 87	7 / 102	8 / 116
AP0 DA	N m	2,4	3,6	4,8	6	7,3	8,5	9,7
	lb f.In	21.4	32.1	42.8	53.5	65.1	75.8	86.5
AP1 DA	N m	5,9	8,9	11,8	14,8	17,7	21,7	24,8
	lb f.In	52.6	79.3	105.2	132	157.8	193.5	221.1
AP2 DA	N m	9,4	14,1	18,8	23,5	28,2	32,9	37,6
	lb f.In	83.8	125.7	167.7	209.6	251.5	293.5	335.4
AP3 DA	N m	20	30	40	50	60	70	80
	lb f.In	178.4	267.6	356.8	446	535.2	624.4	713.6
AP3.5 DA	N m	34	51	68	85	102	119	136
	lb f.In	303.3	454.9	606.5	758.2	909	1061.5	1213.2
AP4 DA	N m	48	71	95	119	142	168	192
	lb f.In	428.2	633.3	847.4	1061	1266.6	1498.5	1712.6
AP4.5 DA	N m	87,2	130,8	174,4	218	261,6	305,2	348,8
	lb f.In	777.8	1166.7	1555.6	1944.5	2333.4	2722.3	3111.2
AP5 DA	N m	111	167	222	278	333	388.5	444
	lb f.In	990.1	1489.6	1980.2	2479.7	2970.4	3465.4	3960.5
AP5.5 DA	N m	157,6	236,4	315,3	394,1	473	551,8	630,6
	lb f.In	1405.7	2108.6	2812.4	3515.3	4219.1	4922	5624.9
AP6 DA	N m	227	340	454	567	680	794.5	908
	lb f.In	2024.8	3032.8	4049.6	5057.6	6065.6	7087	8099.4
AP8 DA	N m	426	638	851	1064	1276	1491	1704
	lb f.In	3800	5691	7591	9491	11382	13299	15200
AP10 DA	N m	1078	1617	2156	2695	3234	3773	4312
	lb f.In	9615.8	14423.6	19231.5	24039.4	28847.3	33655.2	38463
AP12 DA	N m	1880	2820	3760	4701	5641	6581	7522
	lb f.In	16770	25155	33539	41933	50318	58703	67096

NOTE: The output torque of selected actuator mentioned in the table are suitable also for APM series and the value should never be less the required valve torque.

Principle of operation SR

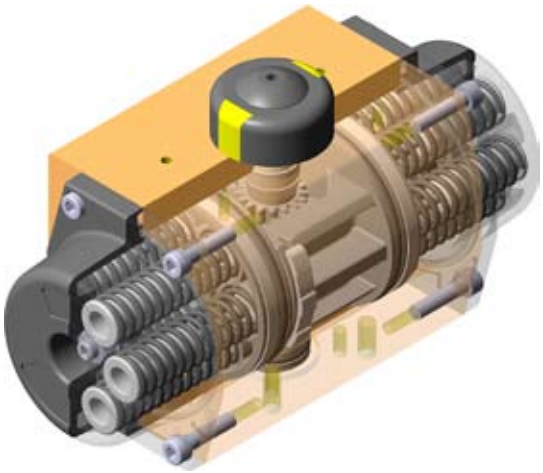

Series AP (SR)

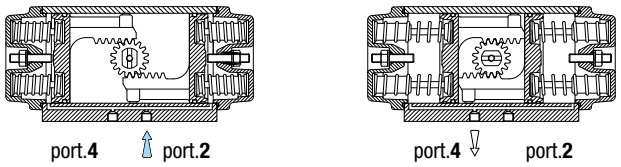

Series APM (SR)

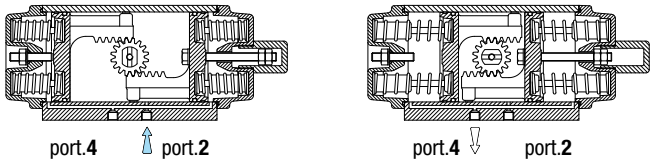

SPRING RETURN ACTUATORS (SR)

Pressure applied to **Port '2'** will cause the inner chambers to be pressurised, forcing the pistons outward to compress the spring. The pinion is rotated counter counteil clockwise. Upon release of pressure through **Port '2'** the springs will exert pressure to close the pistons and rotate the pinion clockwise rapidly. This action will often be used to close a 90° turn valve in shutdown mode.

SELECTION OF SPRING RETURN ACTUATORS (SR)

Determine the required valve torque (this should include 25% safety margin), andthe minimum operating pressure available. Select from the **"SPRING STROKE /"0"** table a value that s not less than the required valve torque (including safety margin). Next refer to the pressure table and select under your minimum pressure and **"90"** torque column a figure not less than required (including safety margin).

EXAMPLE: Valve torque 60 Nm plus 25% = 75 Nm. Checking the **"SPRING STROKE /"0"** column, it will be noted that the nearest value is 108 Nm. By following the line across to the vertical 5 bar **"90"** torque column, a figure of 109 Nm is shown therefore, the suitable actuators is the **AP5SR5**. In a normal valve shut-down situation the actuator would operate the valve to break out a less than 108 Nm. If the **"90"** torque at operating pressure is too low, continue down the column until an acceptable vlua is found, compare with the corresponding **"SPRING STROKE /"0"** column to ensure that this also is adeguate. This model may be used.

RIGHT ARRANGEMENT OF SPRINGS



SR-2 **SR-3** **SR-4** **SR-5** **SR-6**

SPRING RETURN TORQUE RATINGS (SR)

MODEL	N° OF SPRINGS FOR EACH SIDE OF CAP	U.M.	SUPPLY PRESSURE												SPRING STROKE	
		bar / p.s.i.	3 / 44		4 / 58		5 / 73		6 / 87		7 / 102		8 / 118			
			0°	90°	0°	90°	0°	90°	0°	90°	0°	90°	0°	90°	90°	0°
AP1 SR	2	N m	6,5	5,4	9,4	8,3	12,4	11,3	15,3	14,2	19,3	18,2	22,4	21,3	3,5	2,4
		lb f.in	58.0	48.2	83.8	74.0	110.6	100.8	136.5	126.7	172.2	162.3	199.8	190.0	31.2	21.4
	3	N m	5,3	3,7	8,2	6,6	11,2	9,6	14,1	12,5	18,1	16,5	21,2	19,6	5,2	3,6
		lb f.in	47.3	33.0	73.1	58.9	99.9	85.6	125.8	111.5	161.5	147.2	189.1	174.8	46.4	32.1
	4	N m	4,1	1,9	7,0	4,8	10,0	7,8	12,9	10,7	16,9	14,7	20,0	17,8	7,0	4,8
		lb f.in	36.6	16.9	62.4	42.8	89.2	69.6	115.1	95.4	150.7	131.1	178.4	158.8	62.4	42.8
	5	N m	//	//	3,1	2,7	8,8	6,1	11,7	9,0	15,7	13,0	18,8	16,1	8,7	6,0
		lb f.in	//	//	27.7	24.1	78.5	54.4	104.4	80.3	140.0	116.0	167.7	143.6	77.6	53.5
	6	N m	//	//	//	//	7,6	4,3	10,5	7,2	14,5	11,2	17,6	14,3	10,5	7,2
		lb f.in	//	//	//	//	67.8	38.4	93.7	64.2	129.3	99.9	157.0	127.6	93.7	64.2
AP2 SR	2	N m	10,3	8,5	15,0	13,2	19,7	17,9	24,4	22,6	29,1	27,3	33,8	32,0	5,6	3,8
		lb f.in	91.9	75.8	133.8	117.7	175.7	159.7	217.6	201.6	259.6	243.5	301.5	285.4	50.0	33.9
	3	N m	8,4	5,7	13,1	10,4	17,8	15,1	22,5	19,8	27,2	24,5	31,9	29,2	8,4	5,7
		lb f.in	74.9	50.8	116.9	92.8	158.8	134.7	200.7	176.6	242.6	218.5	284.5	260.5	74.9	50.8
	4	N m	//	//	11,2	7,6	15,9	12,3	20,6	17,0	25,3	21,7	30,0	26,4	11,2	7,6
		lb f.in	//	//	99.9	67.8	141.8	109.7	183.8	151.6	225.7	193.6	267.6	235.5	99.9	67.8
	5	N m	//	//	//	//	14,0	9,5	18,7	14,2	23,4	18,9	28,1	23,6	14,0	9,5
		lb f.in	//	//	//	//	124.9	84.7	166.8	126.7	208.7	168.6	250.7	210.5	124.9	84.7
	6	N m	//	//	//	//	12,1	6,7	16,8	11,4	21,5	16,1	26,2	20,8	16,8	11,4
		lb f.in	//	//	//	//	107.9	59.8	149.9	101.7	191.8	143.6	233.7	185.5	149.9	101.7
AP3 SR	2	N m	22,0	18,0	32,0	28,0	42,0	38,0	52,0	48,0	62,0	58,0	72,0	68,0	12,0	8,0
		lb f.in	196.2	160.6	285.4	249.8	374.6	339.0	463.8	428.2	553.0	517.4	642.2	606.6	107.0	71.4
	3	N m	18,0	12,0	28,0	22,0	38,0	32,0	48,0	42,0	58,0	52,0	68,0	62,0	18,0	12,0
		lb f.in	160.6	107.0	249.8	196.2	339.0	285.4	428.2	374.6	517.4	463.8	606.6	553.0	160.6	107.0
	4	N m	//	//	24,0	16,0	34,0	26,0	44,0	36,0	54,0	46,0	64,0	56,0	24,0	16,0
		lb f.in	//	//	214.1	142.7	303.3	231.9	392.5	321.1	481.7	410.3	570.9	499.5	214.1	142.7
	5	N m	//	//	//	//	30,0	20,0	40,0	30,0	50,0	40,0	60,0	50,0	30,0	20,0
		lb f.in	//	//	//	//	267.6	178.4	356.8	267.6	446.0	356.8	535.2	446.0	267.6	178.4
	6	N m	//	//	//	//	26,0	14,0	36,0	24,0	46,0	34,0	56,0	44,0	36,0	24,0
		lb f.in	//	//	//	//	231.9	124.9	321.1	214.1	410.3	303.3	499.5	392.5	321.1	214.1

MODEL	N° OF SPRINGS FOR EACH SIDE OF CAP	U.M.	SUPPLY PRESSURE												SPRING STROKE	
		bar / p.s.i.	3 / 44		4 / 58		5 / 73		6 / 87		7 / 102		8 / 118			
			0°	90°	0°	90°	0°	90°	0°	90°	0°	90°	0°	90°	90°	0°
AP3.5 SR	2	N m	41,5	30,0	58,5	47,0	75,5	64,0	92,5	81,0	109,5	98,0	126,5	115,0	21,0	9,5
		lb f.in	370.2	267.6	521.8	419.2	673.5	570.9	825.1	722.5	976.7	874.2	1128.4	1025.8	187.3	84.7
	3	N m	32,0	20,0	49,0	37,0	66,0	54,0	83,0	71,0	100,0	88,0	117,0	105,0	31,0	19,0
		lb f.in	285.4	178.4	437.1	330.0	588.7	481.7	740.4	633.3	892.0	785.0	1043.6	936.6	276.5	169.5
	4	N m	//	//	43,0	20,0	60,0	37,0	77,0	54,0	94,0	71,0	111,0	88,0	48,0	25,0
		lb f.in	//	//	383.6	178.4	535.2	330.0	686.8	481.7	838.5	633.3	990.1	785.0	428.2	223.0
	5	N m	//	//	//	//	53,0	33,0	70,0	50,0	87,0	67,0	104,0	84,0	52,0	32,0
		lb f.in	//	//	//	//	472.8	294.4	624.4	446.0	776.0	597.6	927.7	749.3	463.8	285.4
	6	N m	//	//	//	//	47,0	22,0	64,0	39,0	81,0	56,0	106,4	73,0	63,0	38,0
		lb f.in	//	//	//	//	419.2	196.2	570.9	347.9	722.5	499.5	949.1	651.2	562.0	339.0
AP4 SR	2	N m	52,7	42,4	76,7	66,4	100,7	90,4	123,7	113,4	149,7	139,4	173,7	175,2	28,6	18,3
		lb f.in	470.1	378.2	684.2	592.3	898.2	806.4	1103.4	1011.5	1335.3	1243.4	1549.4	1562.8	255.1	163.2
	3	N m	43,0	28,0	67,0	52,0	91,0	76,0	114,0	99,0	140,0	125,0	164,0	153,6	43,0	28,0
		lb f.in	383.6	249.8	597.6	463.8	811.7	677.9	1016.9	883.1	1248.8	1115.0	1462.9	1370.1	383.6	249.8
	4	N m	//	//	58,0	38,0	82,0	62,0	105,0	85,0	131,0	111,0	155,0	132,0	57,0	37,0
		lb f.in	//	//	517.4	339.0	731.4	553.0	936.6	758.2	1168.5	990.1	1382.6	1177.4	508.4	330.0
	5	N m	//	//	//	//	73,0	47,0	96,0	70,0	122,0	96,0	146,0	110,4	72,0	46,0
		lb f.in	//	//	//	//	651.2	419.2	856.3	624.4	1088.2	856.3	1302.3	948.8	642.2	410.3
	6	N m	//	//	//	//	64,0	33,0	87,0	56,0	113,0	82,0	137,0	88,8	86,0	55,0
		lb f.in	//	//	//	//	570.9	294.4	776.0	499.5	1008.0	731.4	1222.0	792.1	767.1	490.6
AP4.5 SR	2	N m	96,8	77,5	140,4	121,1	184,0	164,7	227,6	208,3	271,2	251,9	314,8	295,5	53,3	34,0
		lb f.in	950.6	761.1	1378.7	1189.2	1806.9	1617.4	2235.0	2045.5	2663.2	2473.7	3091.3	2901.8	475.4	303.2
	3	N m	79,8	50,9	123,4	94,5	167,0	138,1	210,6	181,7	254,2	225,3	297,8	268,9	79,9	51,0
		lb f.in	783.6	499.8	1211.8	928.0	1639.9	1356.1	2068.1	1784.3	2496.2	2212.4	2924.4	2640.6	712.7	454.9
	4	N m	//	//	106,4	67,8	150,0	111,4	193,6	155,0	237,2	198,6	280,8	242,2	106,6	68,0
		lb f.in	//	//	1044.8	665.8	1473.0	1093.9	1901.2	1522.1	2329.3	1950.3	2757.5	2378.4	950.8	606.5
	5	N m	//	//	//	//	133,0	84,7	176,6	128,3	220,2	171,9	263,8	215,5	133,3	85,0
		lb f.in	//	//	//	//	1306.1	831.8	1734.2	1259.9	2162.4	1688.1	2590.5	2116.2	1189.0	758.2
	6	N m	//	//	//	//	116,0	58,0	159,6	101,6	203,2	145,2	246,8	188,8	160,0	102,0
		lb f.in	//	//	//	//	1139.1	569.6	1567.3	997.7	1995.4	1425.9	2423.6	1854.0	1427.2	909.8
AP5 SR	2	N m	123,7	99,4	178,7	154,4	234,7	210,4	289,7	265,4	345,2	320,9	400,7	376,4	67,6	43,3
		lb f.in	1103.4	886.6	1594.0	1377.2	2093.5	1876.8	2584.1	2367.4	3079.2	2862.4	3574.2	3357.5	603.0	386.2
	3	N m	103,0	66,0	158,0	121,0	214,0	177,0	269,0	232,0	324,5	287,5	380,0	343,0	101,0	64,0
		lb f.in	918.8	588.7	1409.4	1079.3	1908.9	1578.8	2399.5	2069.4	2894.5	2564.5	3389.6	3059.6	900.9	570.9
	4	N m	//	//	136,0	87,0	192,0	143,0	247,0	198,0	302,5	253,5	358,0	309,0	135,0	86,0
		lb f.in	//	//	1231.1	776.0	1712.6	1275.6	2203.2	1766.2	2698.3	2261.2	3193.4	2756..3	1204.2	767.1
	5	N m	//	//	//	//	170,0	109,0	225,0	164,0	280,5	219,5	336,0	275,0	169,0	108,0
		lb f.in	//	//	//	//	1516.4	972.3	2007.0	1462.9	2502.1	1957.9	2997.1	2453.0	1507.5	963.4
	6	N m	//	//	//	//	148,0	75,0	203,0	130,0	258,5	185,5	314,0	241,0	203,0	130,0
		lb f.in	//	//	//	//	1320.2	669.0	1810.8	1159.6	2305.8	1654.7	2800.9	2149.7	1810.8	1159.6
AP5,5 SR	2	N m	179,8	136,4	258,7	215,3	337,5	294,1	416,4	373,0	495,2	451,8	574,0	530,6	100,0	56,6
		lb f.in	1765.6	1339.4	2540.4	2114.2	3314.3	2888.1	4089.0	3662.9	4862.9	4436.7	5636.7	5210.5	892.0	504.8
	3	N m	151,5	86,4	230,4	165,3	309,2	244,1	388,1	323,0	466,9	401,8	545,7	480,6	150,0	84,9
		lb f.in	1487.7	848.4	2262.5	1623.2	3036.3	2397.1	3811.1	3171.9	4585.0	3945.7	5358.8	4719.5	1338.0	757.3
	4	N m	//	//	202,0	115,3	280,8	194,1	359,7	273,0	438,5	351,8	517,3	430,6	200,0	113,3
		lb f.in	//	//	1983.6	1132.2	2757.5	1906.1	3532.3	2680.9	4306.1	3454.7	5079.9	4228.5	1784.0	1010.6
	5	N m	//	//	//	//	252,5	144,1	331,4	223,0	410,2	301,8	489,0	380,6	250,0	141,6
		lb f.in	//	//	//	//	2479.6	1415.1	3254.3	2189.9	4028.2	2963.7	4802.0	3737.5	2230.0	1263.0
	6	N m	//	//	//	//	224,1	94,1	303,0	173,0	381,8	251,8	460,6	330,6	300,0	170,0
		lb f.in	//	//	//	//	2200.7	924.1	2975.5	1698.9	3749.3	2472.7	4523.1	3246.5	2676.0	1516.4
AP6 SR	2	N m	257,0	200,0	371,0	314,0	484,0	427,0	597,0	540,0	711,5	654,5	825,0	768,0	140,0	83,0
		lb f.in	2292.4	1784.0	3309.3	2800.9	4317.3	3808.8	5325.2	4816.8	6346.6	5838.1	7359.0	6850.6	1248.8	740.4
	3	N m	215,0	130,0	329,0	244,0	442,0	357,0	555,0	470,0	669,5	584,5	783,0	698,0	210,0	125,0
		lb f.in	1917.8	1159.6	2934.7	2176.5	3942.6	3184.4	4950.6	4192.4	5971.9	5213.7	6984.4	6226.2	1873.2	1115.0
	4	N m	//	//	287,0	174,0	400,0	287,0	513,0	400,0	627,5	514,5	741,0	628,0	280,0	167,0
		lb f.in	//	//	2560.0	1552.1	3568.0	2560.0	4576.0	3568.0	5597.3	4589.3	6609.7	5601.8	2497.6	1489.6
	5	N m	//	//	//	//	358,0	217,0	471,0	330,0	585,5	444,5	699,0	558,0	350,0	209,0
		lb f.in	//	//	//	//	3193.4	1935.6	4201.3	2943.6	5222.7	3964.9	6235.1	4977.4	3122.0	1864.3
	6	N m	//	//	//	//	316,0	147,0	429,0	260,0	543,5	374,5	657,0	488,0	420,0	251,0
		lb f.in	//	//	//	//	2818.7	1311.2	3826.7	2319.2	4848.0	3340.5	5860.4	4353.0	3746.4	2238.9
AP8 SR	2	N m	478,0	386,0	691,0	599,0	904,0	812,0	1116,0	1024,0	1331,0	1239,0	1704,0	1452,0	252,0	160,0
		lb f.in	4263.8	3443.1	6163.7	5343.1	8063.7	7243.0	9954.7	9134.1	11872.5	11051.9	15199.7	12951.8	2247.8	1427.2
	3	N m	398,0	260,0	611,0	473,0	824,0	686,0	1036,0	898,0	1251,0	1113,0	1464,0	1326,0	378,0	240,0
		lb f.in	3550.2	2319.2	5450.1	4219.2	7350.1	6119.1	9241.1	8010.2	11158.9	9928.0	13058.9	11827.9	3371.8	2140.8
	4	N m	//	//	531,0	347,0	744,0	560,0	956,0	772,0	1171,0	987,0	1384,0	1200,0	504,0	320,0
		lb f.in	//	//	4736.5	3095.2	6636.5	4995.2	8527.5	6886.2	10445.3	8804.0	12345.3	10704.0	4495.7	2854.4
	5	N m	//	//	//	//	664,0	434,0	876,0	646,0	1091,0	861,0	1304,0	1074,0	630,0	400,0
		lb f.in	//	//	//	//	5922.9	3871.3	7813.9	5762.3	9731.7	7680.1	11631.7	9580.1	5619.6	3568.0
	6	N m	//	//	//	//	584,0	308,0	796,0	520,0	1011,0	735,0	1224,0	948,0	756,0	480,0
		lb f.in	//	//	//	//	5209.3	2747.4	7100.3	4638.4	9018.1	6556.2	10918.1	8456.2	6743.5	4281.6
AP10 SR	2	N m	1181,0	957,0	1720,0	1496,0	2259,0	2035,0	2798,0	2574,0	3337,0	3113,0	3876,0	3652,0	660,0	436,0
		lb f.in	11597.4	9397.7	16890.4	14690.7	22183.4	19983.7	27476.4	25276.7	32769.3	30569.7	38062.3	35862.6	6481.2	4281.5
	3	N m	963,0	628,0	1502,0	1167,0	2041,0	1706,0	2580,0	2245,0	3119,0	2784,0	3658,0	3323,0	989,0	654,0
		lb f.in	9456.7	6167.0	14749.6	11459.9	20042.6	16752.9	25335.6	22045.9	30628.6	27338.9	35921.6	32631.9	9712.0	6422.3
	4	N m	//	//	1284,0	837,0	1823,0	1376,0	2362,0	1915,0	2901,0	2454,0	3440,0	2993,0	1319,0	872,0
		lb f.in	//	//	12608.9	8219.3	17901.9	13512.3	23194.8	18805.3	28487.8	24098.3	33780.8	29391.3	12952.6	8563.0
	5	N m	//	//	//	//	1605,0	1046,0	2144,0	1585,0	2683,0	2124,0	3222,0	2663,0	1649,0	1090,0
		lb f.in	//	//	//	//	15761.1	10271.7	21054.1	15564.7	26347.1	20857.7	31640.0	26150.7	16193.2	10703.8
	6	N m	//	//	//	//	//	//	1909,0	1254,0	2448,0	1793,0	2987,0	2332,0	1980,0	1325,0
		lb f.in	//	//	//	//	//	//	18746.4	12314.3	24039.4	17607.3	29332.3	22900.2	19443.6	13011.5
AP12 SR	2	N m	2082,0	1723,0	3022,0	2663,0	3963,0	3604,0	4903,0	4544,0	5843,0	5484,0	6783,0	6424,0	1097,0	738,0
		lb f.in	20445.2	16919.9	29676.0	26150.7	38916.7	35391.3	48147.5	44622.1	57378.3	53852.9	66609.1	63083.7	10772.5	7247.2
	3	N m	1715,0	1174,0	2655,0	2114,0	3596,0	3055,0	4536,0	3995,0	5476,0	4935,0	6416,0	5875,0	1646,0	1105,0
		lb f.in	16841.3	11528.7	26072.1	20759.5	35312.7	30000.1	44543.5	39230.9	53774.3	48461.7	63005.1	57692.5	16163.7	10851.1
	4	N m	//	//	2286,0	1565,0	3227,0	2506,0	4167,0	3446,0	5107,0	4386,0	6047,0	5326,0	2195,0	1474,0
		lb f.in	//	//	22448.5	15368.3	31689.1	24608.9	40919.9	33839.7	50150.7	43070.5	59381.5	52301.3	21554.9	14474.7
	5	N m	//	//	//	//	2859,0	1958,0	3799,0	2898,0	4739,0	3838,0	5679,0	4778,0	2743,0	1842,0
		lb f.in	//	//	//	//	28075.4	19227.6	37306.2	28458.4	46537.0	37689.2	55767.8	46920.0	26936.3	18088.4
	6	N m	//	//	//	//	//	//	3430,0	2349,0	4370,0	3289,0	5310,0	4229,0	3292,0	2211,0
		lb f.in	//	//	//	//	//	//	33682.6	23067.2	42913.4	32298.0	52144.2	41528.8	32327.4	21712.0

NOTE: The output torque of selected actuator mentioned in the table are suitable also for APM series and the value should never be less the required valve torque.

Technical features Pneumatic Actuator AP0÷AP12

Series	AP / APM DA Double Acting / SA Single Acting
Size range	AP0 ÷ AP12 (Ø32 mm to Ø330 mm)
Stroke	90° with single travel adjustment ±3° (AP series) 90° with double travel adjustment ±5° (APM series)
Pressure range	2 bar ÷ 8 bar for Double Acting 3 bar ÷ 8 bar for Single Acting
Torque range	2,4 ÷ 7500 Nm (21,4 ÷ 66875 lbf.in)
Operating temperature	-20 °C ÷ +80 °C (-4 °F ÷ +175 °F) standard
Design reference	UNI EN 15714-3, ISO 5211, VDI / VDE 3845
Flange interface	ISO 5211
Stem connection	Square or polygonal shape ISO 5211
Interface for pilot valve	NAMUR type
Accessories flange	VDI / VDE 3845, UNI EN 15714-3
Applications	They find their best application for actuation of quarter turn valves, such as: ball valve, butterfly valve, plug valve
Certifications	2014/34//UE ATEX, SIL IEC 61508 - IEC 61511 GOST-R, CU TR 10 CU TR 32

Air consuption for stroke (free air) - Liters

Model	AP1 DA/SR	AP2 DA/SR	AP3 DA/SR	AP3,5 DA/SR	AP4 DA/SR	AP4,5 DA/SR	AP5 DA/SR	AP5,5 DA/SR	AP6 DA/SR	AP8 DA/SR	AP10 DA/SR	AP12 DA/SR
Counter clockwise	0,08	0,12	0,24	0,48	0,68	1,00	1,40	1,60	3,20	5,30	14,20	22,00
Clockwise (DA only)	0,10	0,16	0,44	0,56	0,96	1,60	2,16	2,56	4,00	8,60	16,50	49,00

Air consuption for stroke (free air) - Cu.ft.

Model	AP1 DA/SR	AP2 DA/SR	AP3 DA/SR	AP3,5 DA/SR	AP4 DA/SR	AP4,5 DA/SR	AP5 DA/SR	AP5,5 DA/SR	AP6 DA/SR	AP8 DA/SR	AP10 DA/SR	AP12 DA/SR
Counter clockwise	0,0030	0,004	0,008	0,017	0,024	0,035	0,049	0,057	0,11	0,19	0,50	0,78
Clockwise (DA only)	0,0035	0,006	0,016	0,020	0,034	0,057	0,076	0,09	0,14	0,30	0,59	1,75

Weights (Kg)

Model (DA)	AP1 APM1		AP2 APM2		AP3 APM3		AP3,5 APM3,5		AP4 APM4		AP4,5 APM4,5		AP5 APM5		AP5,5 APM5,5		AP6 APM6		AP8 APM8		AP10 APM10		AP12 APM12	
	1,00	1,05	1,42	1,44	2,54	2,62	3,68	3,78	5,10	5,15	8,24	8,33	10,10	10,38	13,94	14,86	19,66	20,40	36,60	37,70	77,00	78,30	150,00	156,00

Model (SR)	AP1 APM1		AP2 APM2		AP3 APM3		AP3,5 APM3,5		AP4 APM4		AP4,5 APM4,5		AP5 APM5		AP5,5 APM5,5		AP6 APM6		AP8 APM8		AP10 APM10		AP12 APM12	
	1,12	1,16	1,56	1,60	3,10	3,18	4,30	4,40	6,20	6,25	9,67	9,76	12,62	12,90	17,09	18,01	23,86	24,60	44,82	45,93	101,00	102,30	192,00	198,00

Weights considering 6 (six) spring on each side of the caps

Weights (lbs)

Model (DA)	AP1 APM1		AP2 APM2		AP3 APM3		AP3,5 APM3,5		AP4 APM4		AP4,5 APM4,5		AP5 APM5		AP5,5 APM5,5		AP6 APM6		AP8 APM8		AP10 APM10		AP12 APM12	
	2.20	2.31	3.13	3.17	5.60	5.78	8.11	8.33	11.24	11.35	18.17	18.36	22.27	22.88	30.73	32.76	43.34	44.97	80.69	83.11	169.76	172.62	330.69	343.92

Model (SR)	AP1 APM1		AP2 APM2		AP3 APM3		AP3,5 APM3,5		AP4 APM4		AP4,5 APM4,5		AP5 APM5		AP5,5 APM5,5		AP6 APM6		AP8 APM8		AP10 APM10		AP12 APM12	
	2.47	2.56	3.44	3.53	6.83	7.01	9.48	9.70	13.67	13.78	21.32	21.52	27.82	28.44	37.68	39.71	52.60	54.23	98.81	101.26	222.67	225.53	423.29	436.51

Weights considering 6 (six) spring on each side of the caps

Opening / Closing Time (sec) at 5,5 bar - (80 p.s.i.)

Model	AP1	AP2	AP3	AP3,5	AP4	AP4,5	AP5	AP5,5	AP6	AP8	AP10	AP12
Double Acting (DA)	Less than 0,5	Less than 1	Less than 1	Less than 1	Less than 1	Less than 1	Less than 1,25	Less than 1,5	1,5 - 2	3 - 4	5 - 6	5 - 6
Spring Return (SR)	Less than 0,5	Less than 1	Less than 1	Less than 1	Less than 1	Less than 1	1,5 - 2	Less than 2	2 - 3	4 - 6	7 - 8	7 - 8

NOTE: The times indicated above are refer to bench-trial without torque applied. Actuator power supply: 5 bar.

NOTE: **AP0 model** see page 7 →

Exploded view Pneumatic Actuator AP0 DA - Standard material configuration

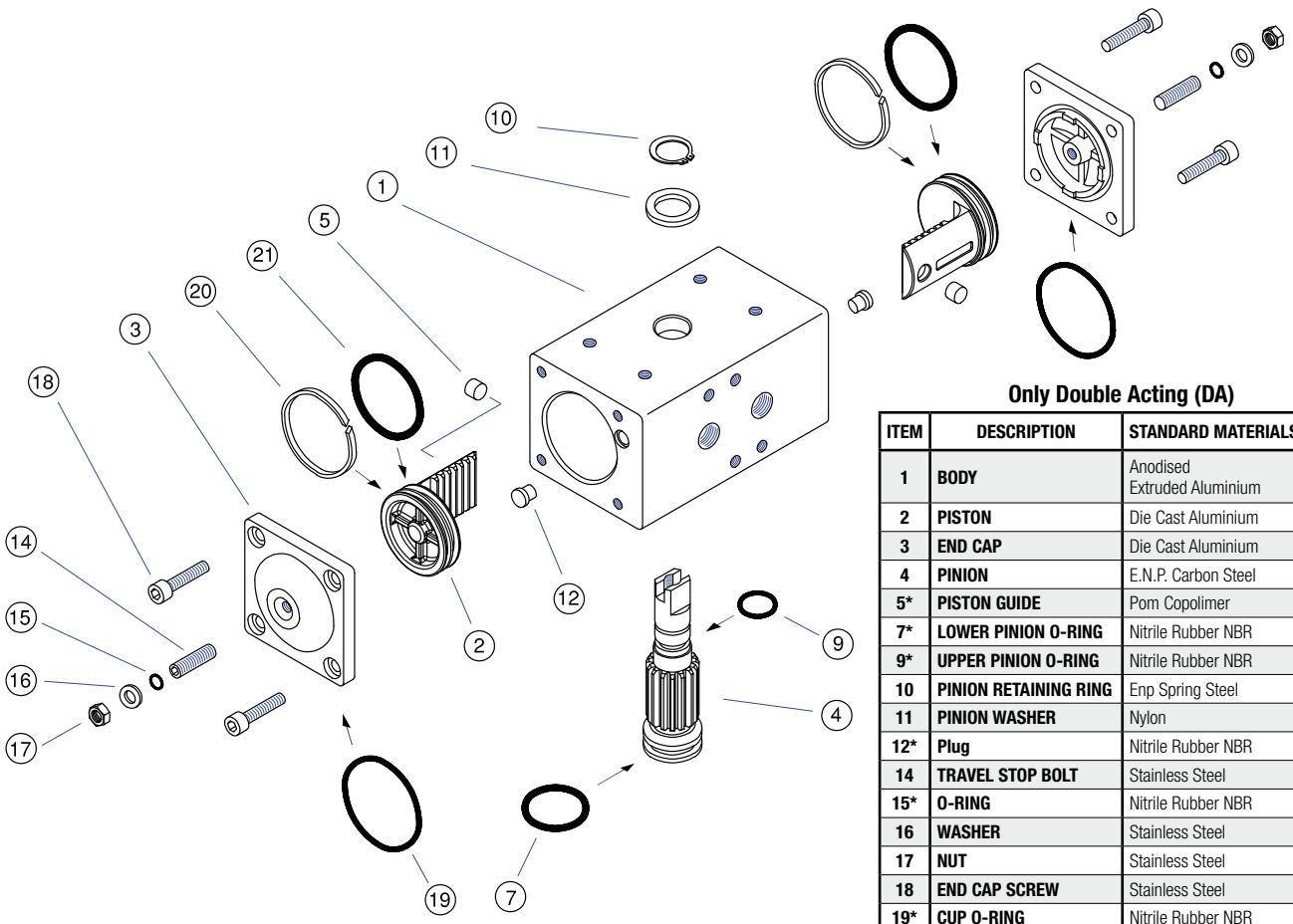

Only Double Acting (DA)

ITEM	DESCRIPTION	STANDARD MATERIALS	Q.TY
1	BODY	Anodised Extruded Aluminium	1
2	PISTON	Die Cast Aluminium	2
3	END CAP	Die Cast Aluminium	2
4	PINION	E.N.P. Carbon Steel	1
5*	PISTON GUIDE	Pom Copolimer	2
7*	LOWER PINION O-RING	Nitrile Rubber NBR	1
9*	UPPER PINION O-RING	Nitrile Rubber NBR	1
10	PINION RETAINING RING	Enp Spring Steel	1
11	PINION WASHER	Nylon	1
12*	Plug	Nitrile Rubber NBR	2
14	TRAVEL STOP BOLT	Stainless Steel	2
15*	O-RING	Nitrile Rubber NBR	2
16	WASHER	Stainless Steel	2
17	NUT	Stainless Steel	2
18	END CAP SCREW	Stainless Steel	8
19*	CUP O-RING	Nitrile Rubber NBR	2
20*	PISTON RING	Nylon	2
21*	PISTON O-RING	Nitrile Rubber NBR	2

* Suggested spare parts for maintenance included in spare parts kit

Overall dimensions - Technical features Pneumatic Actuator AP0 DA

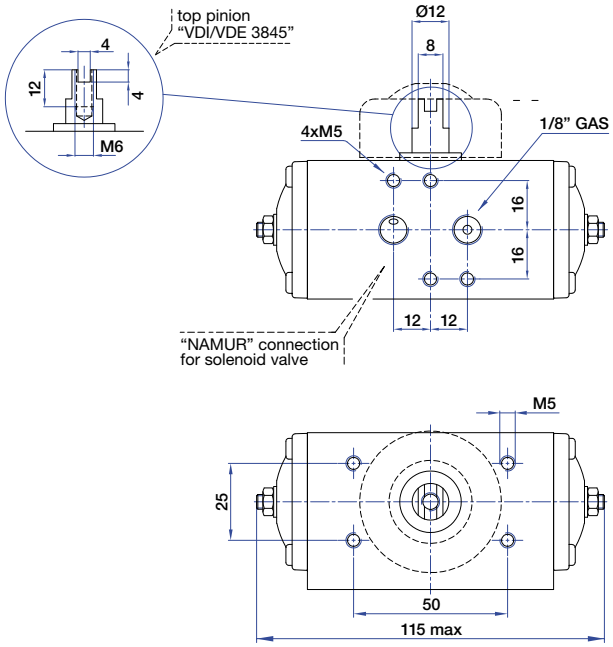

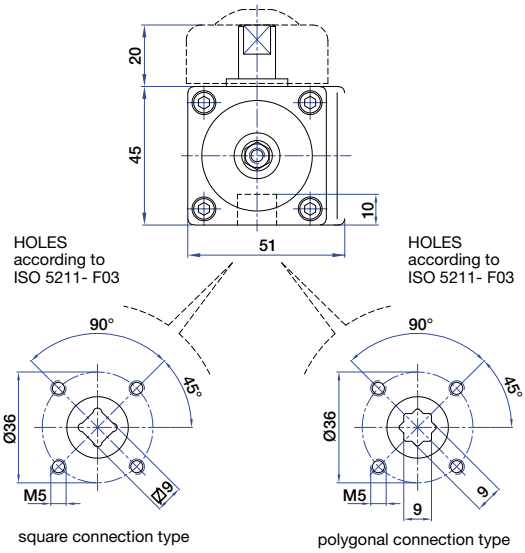

TORQUE OUTPUT DOUBLE ACTING (DA)

	OPERATING PRESSURE						
bar / p.s.i.	2 / 29	3 / 44	4 / 58	5 / 73	6 / 87	7 / 102	8 / 116
N m	2,4	3,6	4,8	6,0	7,3	8,5	9,7
lb f.In	21.4	32.1	42.8	53.5	65.1	75.8	86.5

AIR CONSUMPTION FOR STROKE (FREEAIR)

Counter Clockwise	Liters	0,04
	Cu.ft.	0.0014
Clockwise (DA only)	Liters	0,05
	Cu.ft.	0.0018

OPENING/CLOSING TIME (sec.) at 5.6 bar/80 p.s.i.

Double Acting	Less than 0,5 sec.

Weight: Kg 0,51 - lbs. 1.12

Exploded view Pneumatic Actuator AP1÷ AP10 - Standard material configuration

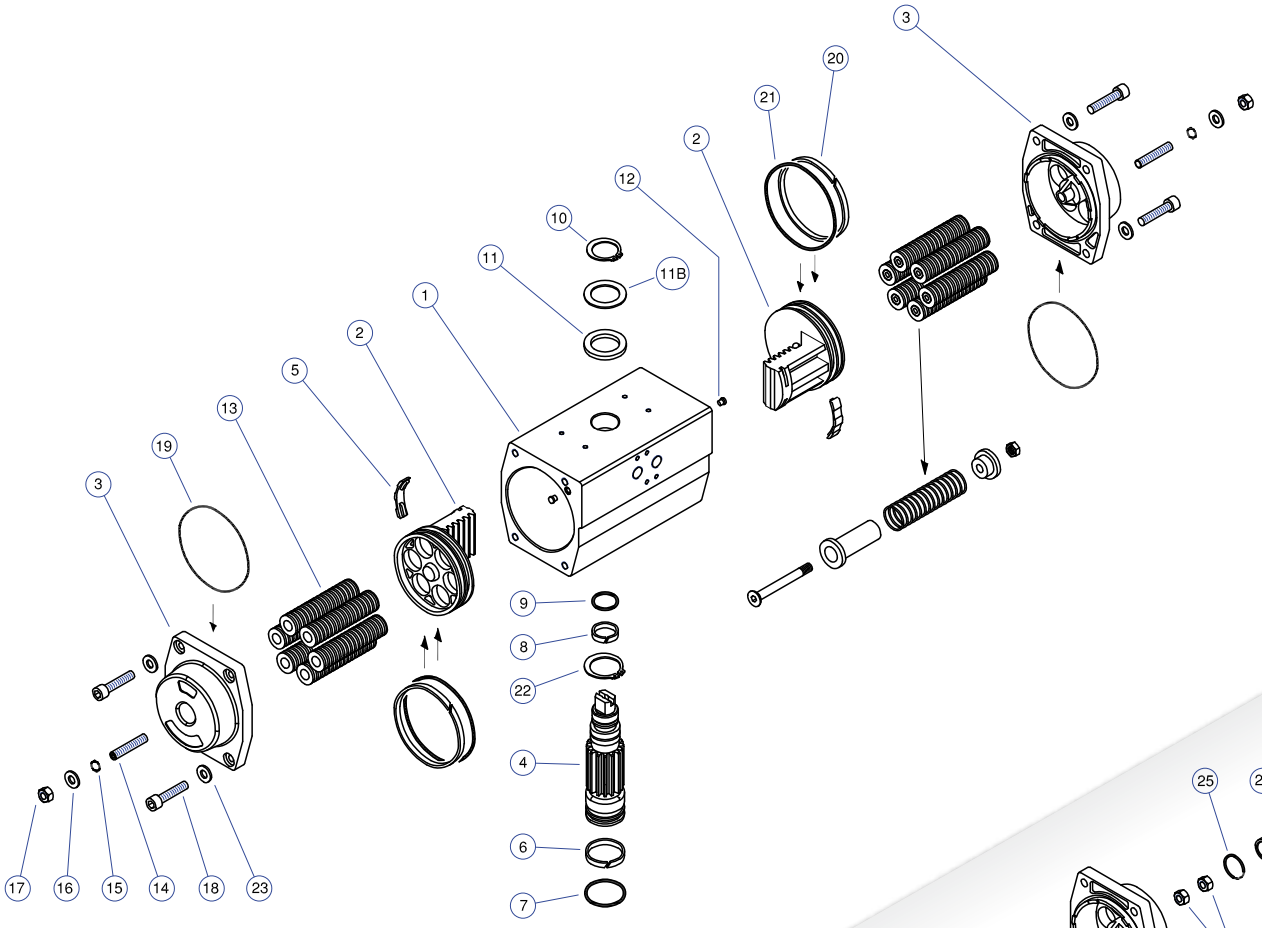

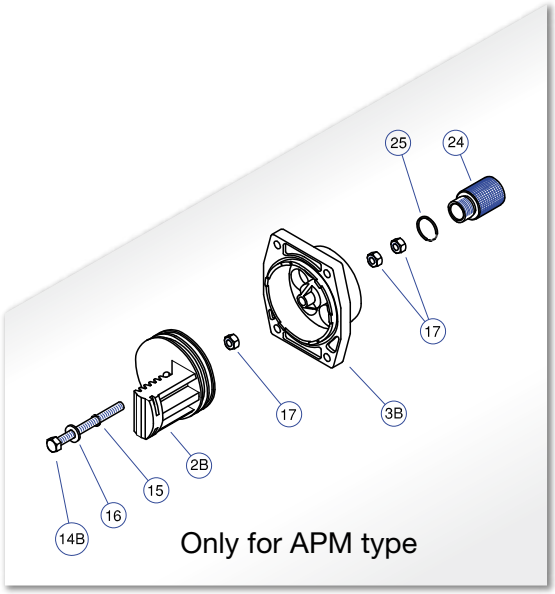

Double Acting (DA) and Spring Return (SR)

ITEM	DESCRITPION	STANDARD MATERIALS	QUANTITY AP	QUANTITY APM
1	**BODY**	Anodised Extruded Aluminium	1	1
2	**PISTON**	Die Cast Aluminium	2	1
2B	**PISTON**	Die Cast Aluminium	0	1
3	**END CAP**	Die Cast Aluminium	2	1
3B	**END CAP**	Die Cast Aluminium	0	1
4	**PINION**	E.N.P. Carbon Steel	1	1
5*	**PISTON GUIDE**	Pom Copolimer	2	2
6*	**LOWER PINION**	Ring Nylon	1	1
7*	**LOWER PINION O-RING**	Nitrile Rubber NBR	1	1
8*	**UPPER PINION RING**	Nylon	1	1
9*	**UPPER PINION O-RING**	Nitrile Rubber NBR	1	1
10	**PINION RETAINING RING**	Enp Spring Steel	1	1
11	**PINION WASHER**	Nylon	1	1
11B	**STEEL PINION WASHER** (only for AP10 model)	E.N.P. Carbon Steel	1	1
12*	**PLUG**	Nitrile Rubber NBR	2	2
13	**SPIRING (Cartridge)**	Spring Steel Coated	4÷12	4÷12
14	**TRAVEL STOP BOLT**	Stainless Steel	2	1
14B	**TRAVEL STOP SCREW**	Stainless Steel	0	1
15*	**O-RING**	Nitrile Rubber NBR	2	1
16	**WASHER**	Stainless Steel	2	2
17	**NUT**	Stainless Steel	2	4
18	**END CAP SCREW**	Stainless Steel	8	8
19*	**CUP O-RING**	Nitrile Rubber NBR	2	2
21*	**PISTON O-RING**	Nitrile Rubber NBR	2	2
22	**INTERNAL PINION RETAINING RING** (on request)	Enp Spring Steel	1	1
23	**WASHER SCREW**	Stainless Steel	4÷8	4÷8
24	**CUP PLUG**	Aluminium	0	1
25*	**O-RING**	Nitrile Rubber NBR	0	1

* Suggested spare parts for maintenance included in spare parts kit

Overall dimensions AP1÷ AP10

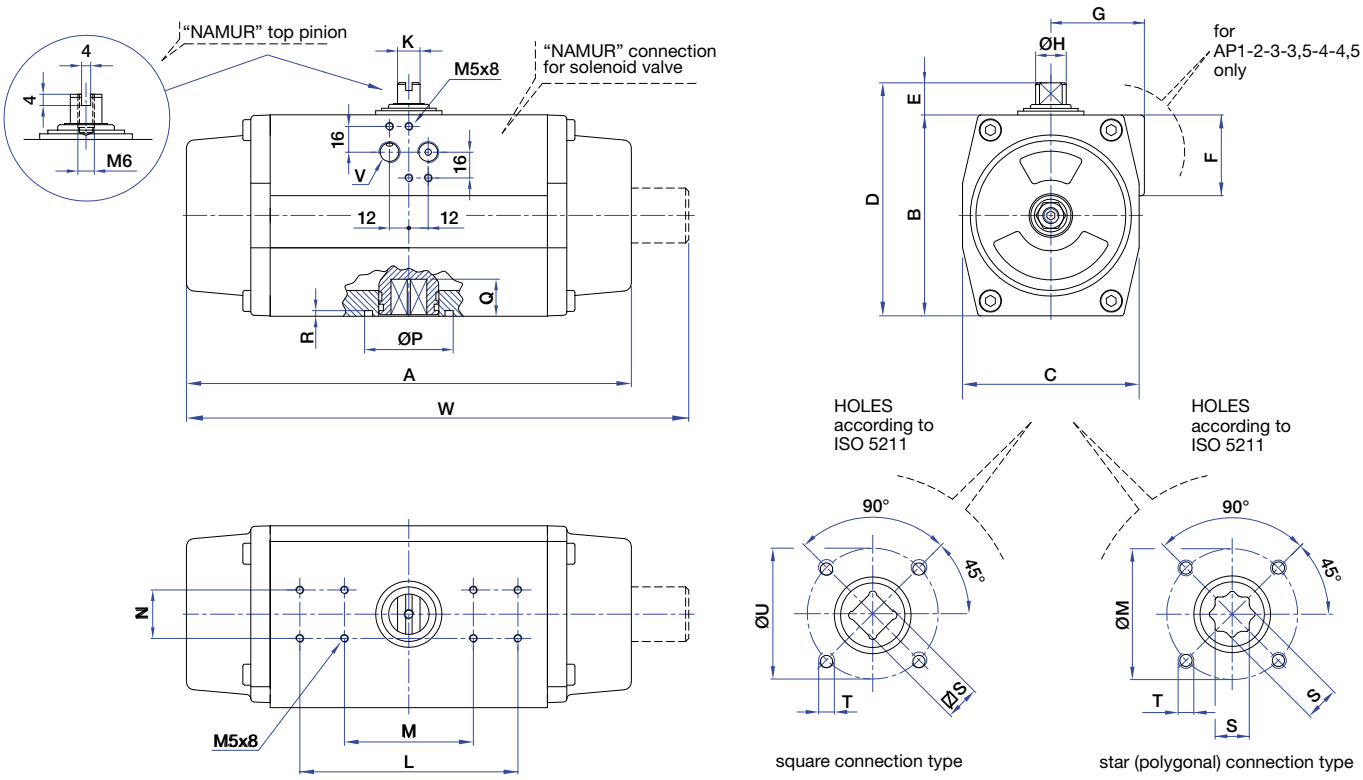

MODEL	U.M.	A	W*	B	C	D	E	F	G	H	K	L	M	N	P	Q	R	⊠ S-S H11	T	U	V*	ISO 5211 std	ISO 5211 spec
AP1 DA/SR	mm	142	162	67	60	87	20	42	41	12	8	//	80	30	25	10	2	9/11**	M5/M6	36/50	1/8"	F03/F05	F04
	ins.	5.59	6.38	2.64	2.36	3.43	0.79	1.65	1.61	0.47	0.31	//	3.15	1.18	0.98	0.39	0.08	0.35/0.43**		1.42/1.97			
AP2 DA/SR	mm	155	171	83	73	103	20	42	44,5	12	8	//	80	30	30 / 35	12	2	11/14**	M5/M6	42/50	1/4"	*** F04 or F05	//
	ins.	6.10	6.73	3.27	2.87	4.06	0.79	1.65	1.75	0.47	0.31	//	3.15	1.18	1.18/1.38	0.47	0.08	0.43/0.55**		1.65/1.97			
AP3 DA/SR	mm	213	240	100	85	120	20	50	49,5	14	10	//	80	30	35	16	2	14/17**	M6/M8	50/70	1/4"	F05/F07	//
	ins.	8.33	9.45	3.94	3.35	4.72	0.79	1.97	1.95	0.55	0.39	//	3.15	1.18	1.38	0.63	0.12	0.43/0.67**		1.97/2.76			
AP3.5 DA/SR	mm	236	268	110	98	130	20	50	53	19	14	//	80	30	55	20	3,5	17/22**	M8	70	1/4"	F07	F05
	ins.	9.29	10.55	4.33	3.86	5.12	0.79	1.97	2.09	0.75	0.55	//	3.15	1.18	2.17	0.79	0.14	0.67/0.87**		2.76			
AP4 DA/SR	mm	276	304	125	110	145	20	50	58	19	14	//	80	30	55	20	3,5	17/22**	M8/M10	70/102	1/4"	F07/F10	//
	ins.	10.87	11.97	4.92	4.33	5.71	0.79	1.97	2.28	0.75	0.55	//	3.15	1.18	2.17	0.79	0.14	0.67/0.87**		2.76/4.02			
AP4.5 DA/SR	mm	310	350	142	128	172	30	58	69	28	20	130	80	30	70	24	3,5	17**/22	M10	102	1/4"	F10	F07
	ins.	12.20	13.78	5.59	5.04	6.77	1.18	2.28	2.72	1.10	0.79	5.12	3.15	1.18	2.76	0.94	0.14	0.67**/0.87		4.02			
AP5 DA/SR	mm	366	405	155	140	185	30	//	//	28	20	130	80	30	70	24	3,5	17**/22	M10	102	1/4"	F10	F07/F12
	ins.	14.41	15.94	6.10	5.51	7.28	1.18	//	//	1.10	0.79	5.12	3.15	1.18	2.76	0.94	0.14	0.67**/0.87		4.02			
AP5.5 DA/SR	mm	388	442	176	160	206	30	//	//	36	28	130	80	30	85	29	3,5	22**/27	M12	125	1/4"	F12	F10
	ins.	15.27	17.40	6.93	6.30	8.11	1.18	//	//	1.42	1.10	5.12	3.15	1.18	3.35	1.14	0.14	0.87**/1.06		4.92			
AP6 DA/SR	mm	468	500	200	175	230	30	//	//	36	28	130	80	30	85	29	3,5	22**/27	M12	125	1/4"	F12	F10
	ins.	18.42	19.68	7.87	6.89	9.06	1.18	//	//	1.42	1.10	5.12	3.15	1.18	3.35	1.14	0.14	0.87**/1.06		4.92			
AP8 DA/SR	mm	563	612	250	215	300	30	//	//	48	32	130	//	30	100	38	5	27**/36	M16	140	F14	F14	F12
	ins.	22.16	24.09	9.84	8.46	11.81	1.97	//	//	1.89	1.26	5.12	//	1.18	3.94	1.50	0.20	1.06**/1.42		5.51			
AP10 DA/SR	mm	750	838	335	290	385	50	//	//	48	32	130	//	30	130	50	5	36**/46	M20	165	1/4"	F16	F14
	ins.	29.53	32.99	13.19	11.42	15.16	1.97	//	//	1.89	1.26	5.12	//	1.18	5.12	1.97	0.20	1.42**/1.81		6.50			

W* dimension only for APM series

** S dimension with (**) only request

V* dimensions threated GAS or NPT

*** To be chosen when ordering

Exploded view Pneumatic Actuator AP12 - Standard material configuration (only APM Type)

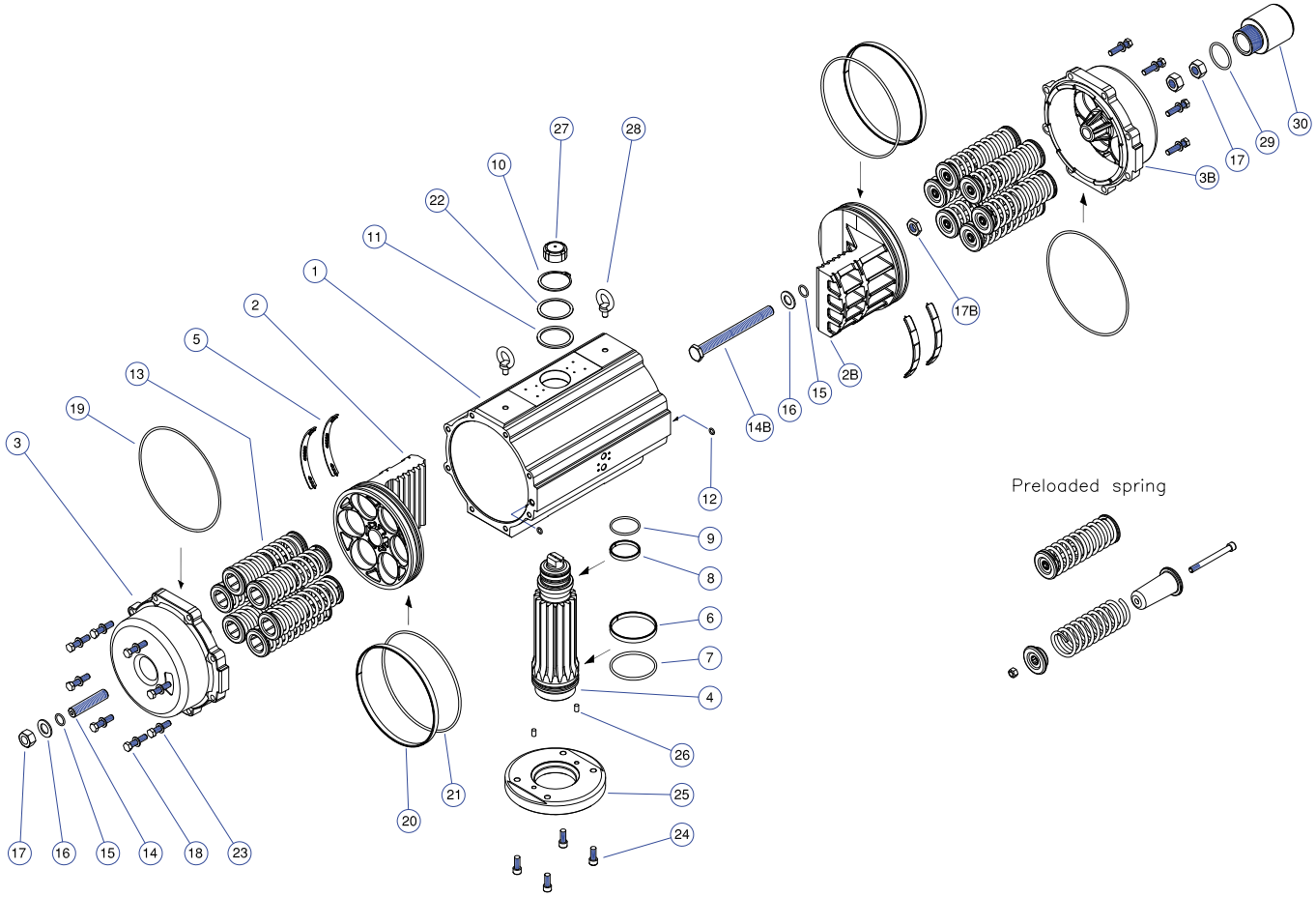

Double Acting (DA) and Spring Return (SR)

ITEM	DESCRITPION	STANDARD MATERIALS	QUANTITY AP	QUANTITY APM
1	BODY	Anodised Extruded Aluminium	1	1
2	PISTON	Die Cast Aluminium	2	1
2B	PISTON	Die Cast Aluminium	0	1
3	END CAP	Die Cast Aluminium	2	1
3B	END CAP	Die Cast Aluminium	0	1
4	PINION	E.N.P. Carbon Steel	1	1
5*	PISTON GUIDE	Pom Copolimer	4	4
6*	LOWER PINION RING	Nylon	1	1
7*	LOWER PINION O-RING	Nitrile Rubber NBR	1	1
8*	UPPER PINION RING	Nylon	1	1
9*	UPPER PINION O-RING	Nitrile Rubber NBR	1	1
10	PINION RETAINING RING	Enp Spring Steel	1	1
11	PINION WASHER	Nylon	1	1
12*	O-RING	Nitrile Rubber NBR	2	2
13	SPIRING (Cartridge)	Spring Steel Coated	4÷12	4÷12
14	TRAVEL STOP BOLT	Stainless Steel	2	1
14B	TRAVEL STOP SCREW	Stainless Steel	0	1
15*	O-RING	Nitrile Rubber NBR	2	1
16	WASHER	Stainless Steel	2	2
17	NUT	Stainless Steel	2	3
17B	NUT (LOW TYPE)	Stainless Steel	0	1
18	END CAP SCREW	Stainless Steel	16	16
19*	CUP O-RING	Nitrile Rubber NBR	2	2
21*	PISTON O-RING	Nitrile Rubber NBR	2	2
22	STEEL PINION WASHER	E.N.P. Carbon Steel	1	1
23	WASHER SCREW	Stainless Steel	16	16
24	FLANGE SCREW	Stainless Steel	4	4
25	FLANGE	Carbon Steel Coated	1	1
26	CILINDRIC PIN	Stainless Steel	2	2
27	INDICATOR or CAM	Polypropilene	1	1
28	EYE BOLT	Stainless Steel	2	2
29*	O-RING	Nitrile Rubber NBR	0	1
30	END CUP PLUG	Aluminium	0	1

* Suggested spare parts for maintenance included in spare parts kit

Pneumatic Actuator AP12

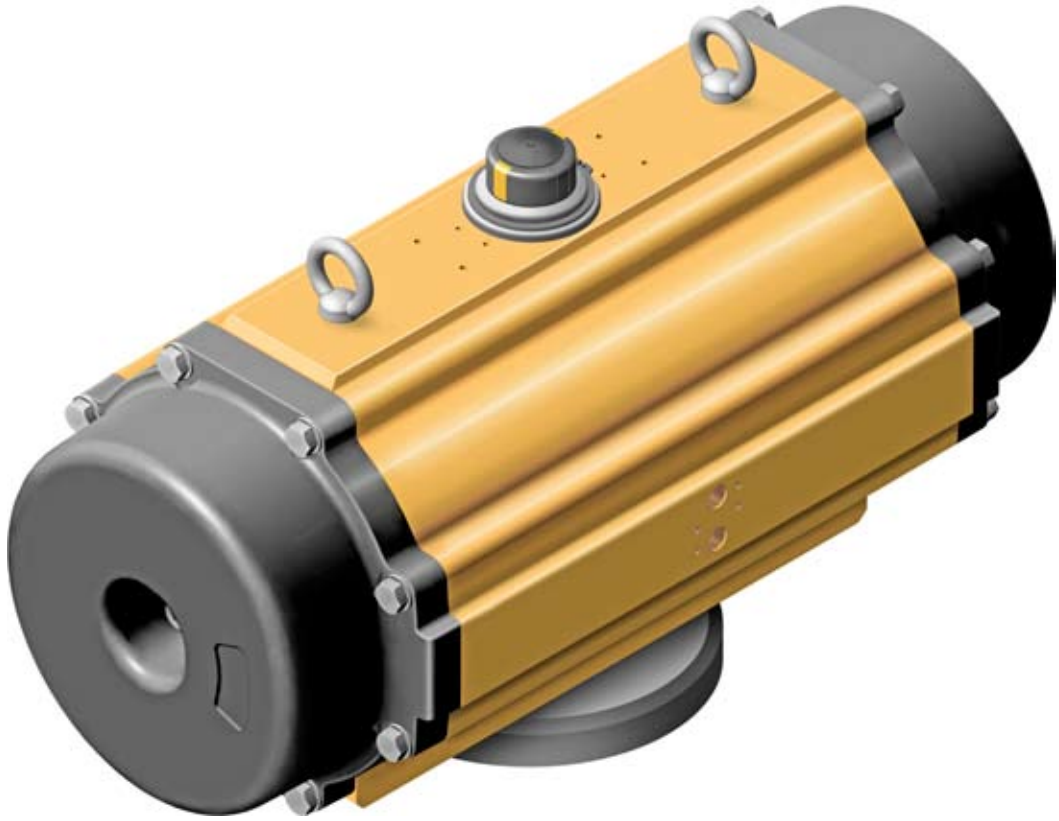

Overall dimensions

ATTENTION:
Eyebolt must be used
ONLY to lift the actuator,
NOT to lift actuator+valve!

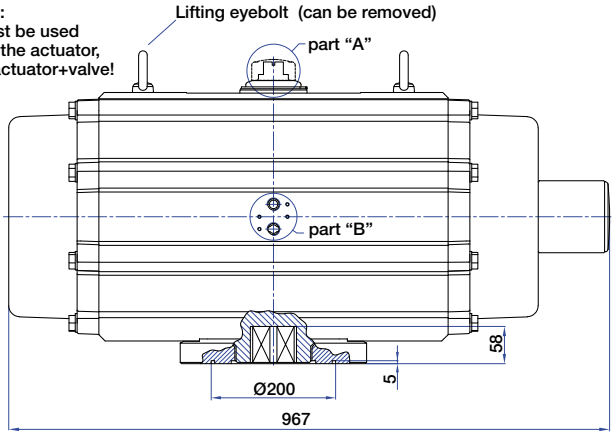

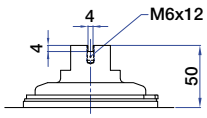

Part "A" scale 1: 2
Accessories connection
according to:
VDI/VDE 3845
UNI EN 15714-3

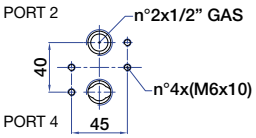

Part "B" scale 1: 2
Interface for directly
attached solenoid valve
according to:
VDI/VDE 3845
UNI EN 15714-3

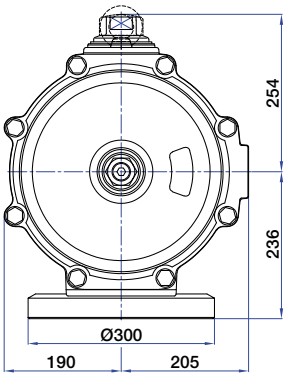

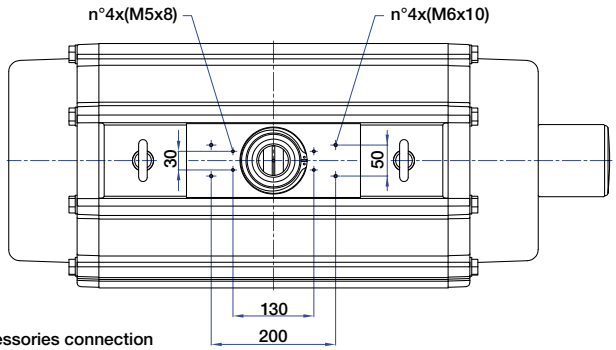

Flange accessories connection
according to:
VDI/VDE 3845
UNI EN 15714-3

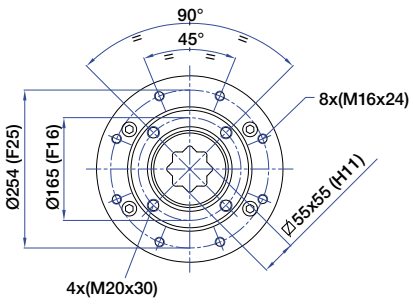

Flange connection
according to:
UNI EN ISO 5211

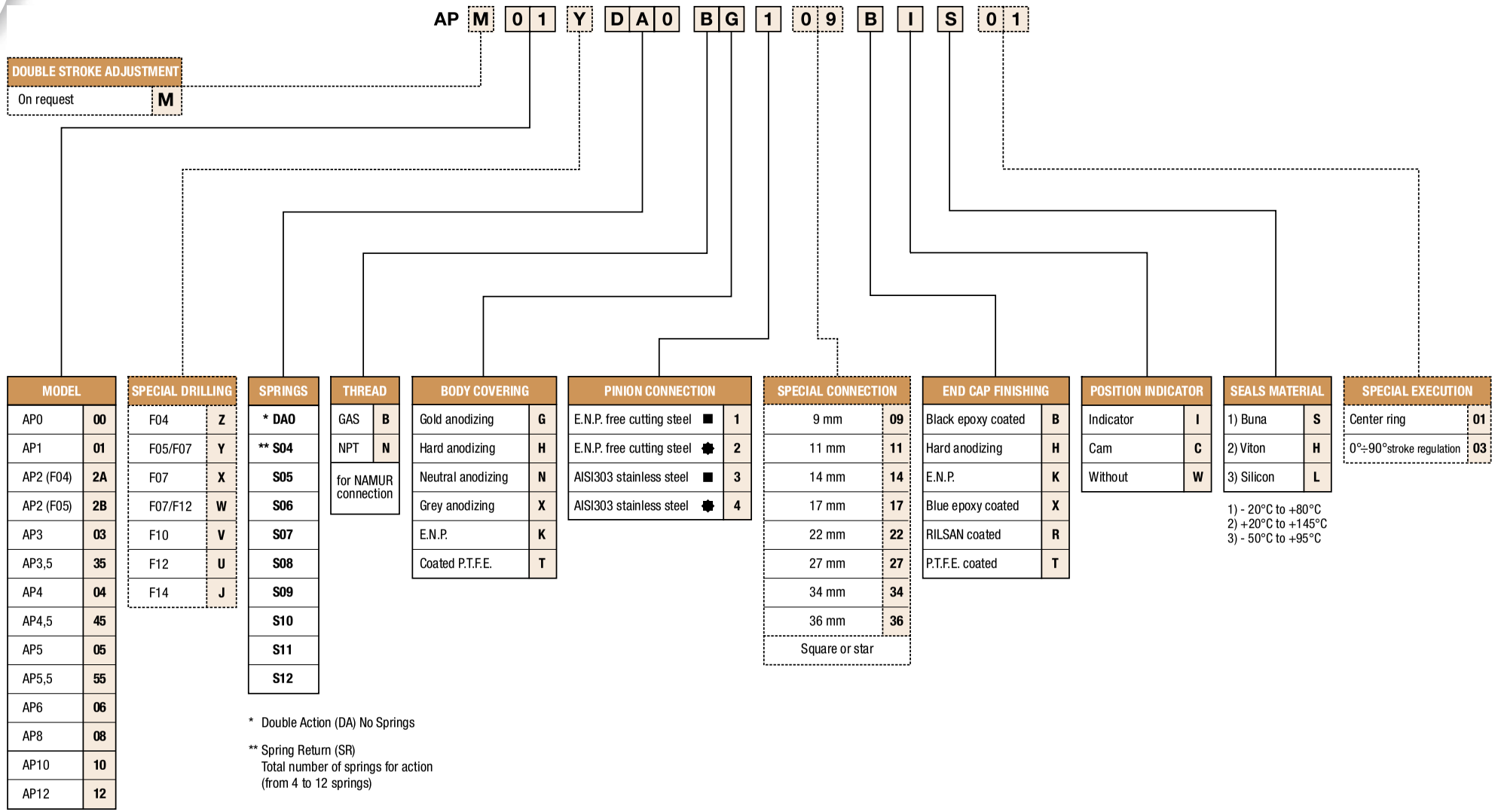

DOUBLE STROKE ADJUSTMENT	
On request	M

MODEL	
AP0	00
AP1	01
AP2 (F04)	2A
AP2 (F05)	2B
AP3	03
AP3,5	35
AP4	04
AP4,5	45
AP5	05
AP5,5	55
AP6	06
AP8	08
AP10	10
AP12	12

SPECIAL DRILLING	
F04	Z
F05/F07	Y
F07	X
F07/F12	W
F10	V
F12	U
F14	J

SPRINGS
* DAO
** S04
S05
S06
S07
S08
S09
S10
S11
S12

* Double Action (DA) No Springs

** Spring Return (SR)
Total number of springs for action
(from 4 to 12 springs)

THREAD	
GAS	B
NPT	N
for NAMUR connection	

BODY COVERING	
Gold anodizing	G
Hard anodizing	H
Neutral anodizing	N
Grey anodizing	X
E.N.P.	K
Coated P.T.F.E.	T

PINION CONNECTION	
E.N.P. free cutting steel ■	1
E.N.P. free cutting steel ✹	2
AISI303 stainless steel ■	3
AISI303 stainless steel ✹	4

SPECIAL CONNECTION	
9 mm	09
11 mm	11
14 mm	14
17 mm	17
22 mm	22
27 mm	27
34 mm	34
36 mm	36
Square or star	

END CAP FINISHING	
Black epoxy coated	B
Hard anodizing	H
E.N.P.	K
Blue epoxy coated	X
RILSAN coated	R
P.T.F.E. coated	T

POSITION INDICATOR	
Indicator	I
Cam	C
Without	W

SEALS MATERIAL	
1) Buna	S
2) Viton	H
3) Silicon	L

1) - 20°C to +80°C
2) +20°C to +145°C
3) - 50°C to +95°C

SPECIAL EXECUTION	
Center ring	01
0°÷90°stroke regulation	03

LIMIT SWITCH BOX



PNEUMATIC POSITIONER



ELECTRO-PNEUMATIC POSITIONER 4÷20 mA signal



LIMIT SWITCH BOX + ELECTRO-PNEUMATIC POSITIONER 4÷20 mA signal



SOLENOID VALVE



DISANGEABLE GEAR BOX



CAT-AP/APM-01-12/18

SIRCA INTERNATIONAL S.P.A.

Via Trieste n° 8 - 20060 TREZZANO ROSA (MI - ITALY) - Phone ++39 02 92010204
Fax ++39 02 92010216 Purchase Dept. - Fax ++39 02 92011954 Sales Dept.
E-mail: info@sircainternational.com - web site: www.sircainternational.com