SIRCA
INTERNATIONAL S.P.A.



# AP/APM series
# Pneumatic Rotary Actuators

# OUR PRODUCTION

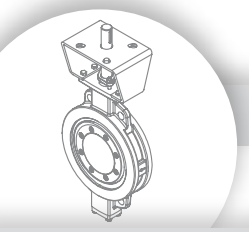

**501M series** - Triple Eccentric Metal Seated Butterfly Valves

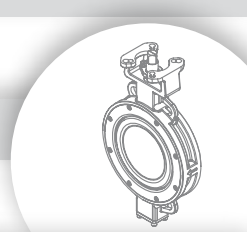

**401N series** - Double Eccentric Butterfly Valves

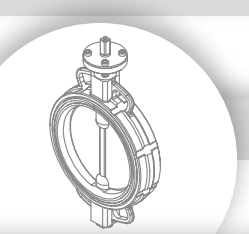

**301 / 301E series** - Butterfly Valves with rubber seat

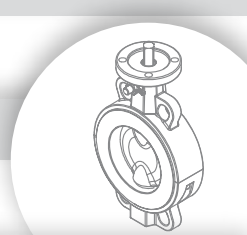

**301TSS / 301TT series** - Butterfly Valves with PTFE lined

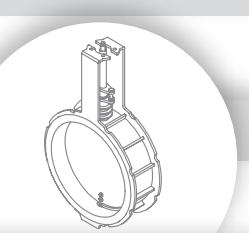

**HT600 series** - Damper valves for high temperature

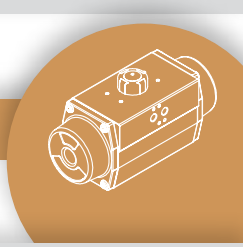

**AP / APM series** - Pneumatic Rotary Actuators

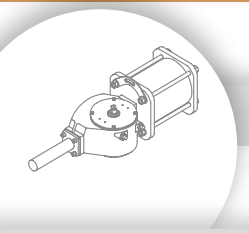

**APG series** - Schotch Yoke Pneumatic Actuators

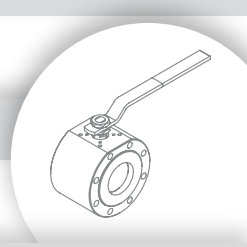

**S10 series** - Wafer Flat Body Ball Valves

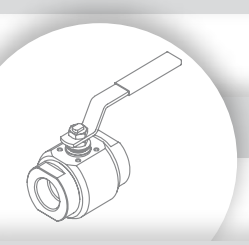

**S20 series** - Two-pieces 800 p.s.i. Ball Valves

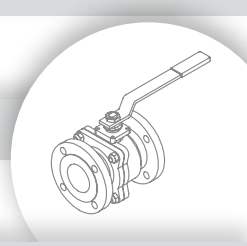

**S30 series** - Split Body Ball Valves

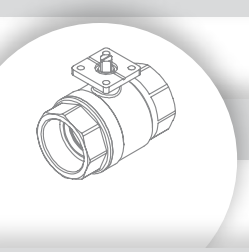

**S40, S50, S60, S70, S80 series** - Threaded actuated and manual ball valves

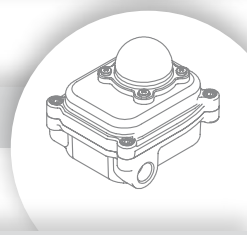

**MBX series** - Limit Switch Box

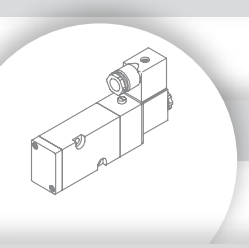

**SVS series** - Solenoid valve 5/2 or 3/2 way

**ACCESSORIES**

JIRCA INTERNATIONAL S.P.A.




Sirca International SpA was founded in the late seventies, and started doing business as a manufacturer of complete automation and pneumatic regulation systems.
Our flagship product is rotating pneumatic quarter-turn actuators which are compact, lightweight and highly reliable.

Subsequently, our company entered the Italian market with the production and sale of rubber-seated butterfly valves, double eccentric butterfly valves, ball valves and check valves.
In time at Sirca International we began marketing and producing accessories to actuate, control and regulate valves. These were installed on our own valves and actuators in order to offer our customers complete “assemblies” that are capable of meeting the most varied system requirements.

Beginning in the 1990s, our company began looking at foreign markets and in a short time we started exporting more than 60% of our production.
This type of market development requires continuous product innovation as well as continuous effort to maintain product competitiveness and quality.
With this motivation and these objectives, with the arrival of the new millenium we at Sirca International began designing and producing the triple eccentric butterfly valve metal-seated that are currently top of the range of the valves produced at Sirca.

The main strong points of Sirca International SpA lie in our product quality, competitive price, large warehouse stocks and in the reliability of our services. These confirm our status as a Leading Company on the national and international markets.

## Constructive features

### AP type

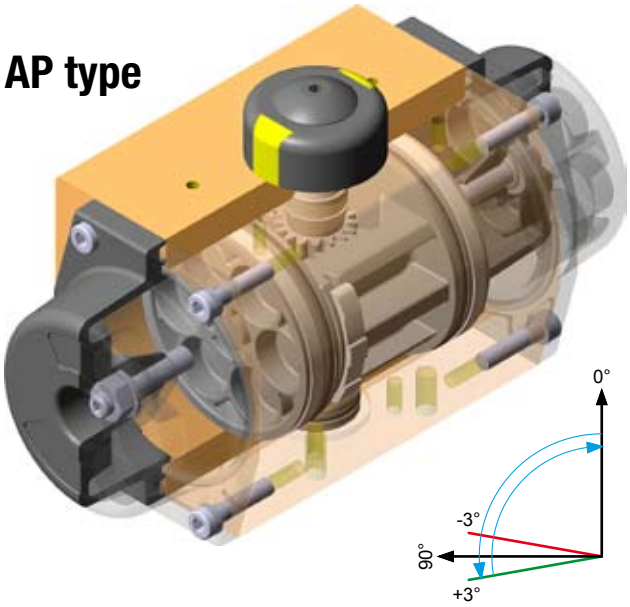


### APM type

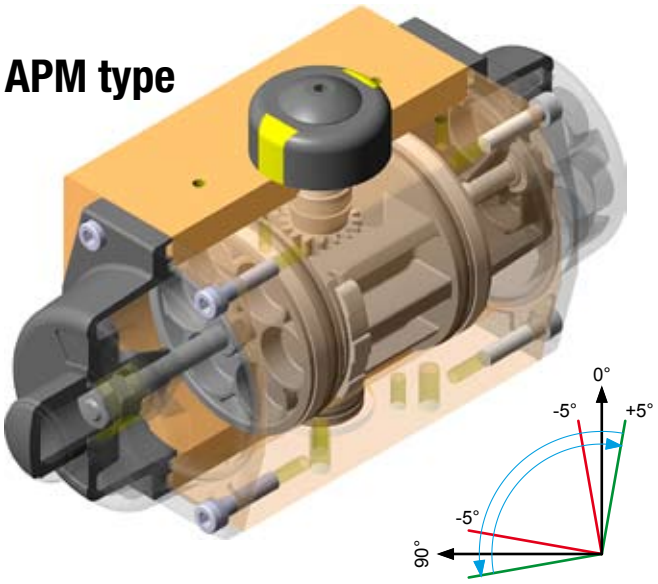


Two type of model: **AP** and **APM** series.

**AP** series, with single adjustment, allows only the adjustment of the stroke of the pistons in opening position 90° ± 3°.

**APM** series, with double adjustment, allows to adjust the stroke of the pistons in closing and opening of ± 5°.

Dual piston rack and pinion design for compact construction, symmetric mounting piston. One compact design with identical body and end caps for double acting and spring return model.

Extruded aluminium body, available with two types of corrosion protection, gold anodised or hard anodised. All bodies are machined with CNC controlled machines in order to obtain the highest quality and precision.

End caps and pistons are made of die-cast aluminum. End caps are painted.

Pinion is made in nickel plated steel alloy. An anti-blowout system prevents the stem from slipping out of the actuator body.

All moving components, are equipped with special anti-friction rings or bearing.

All springs are made with an encapsulated system that avoids the risk of accidents during the disassembly phases of the actuator.

Internal and external stainless steel fasteners for long term corrosion resistance.

**Conform to technical specifications:**
ISO 5211, DIN3337 and VDI / VDE 3845 NAMUR for product interchangeability and easy mounting of solenoids valve, limit switches and other accessories.

## Mounting variation

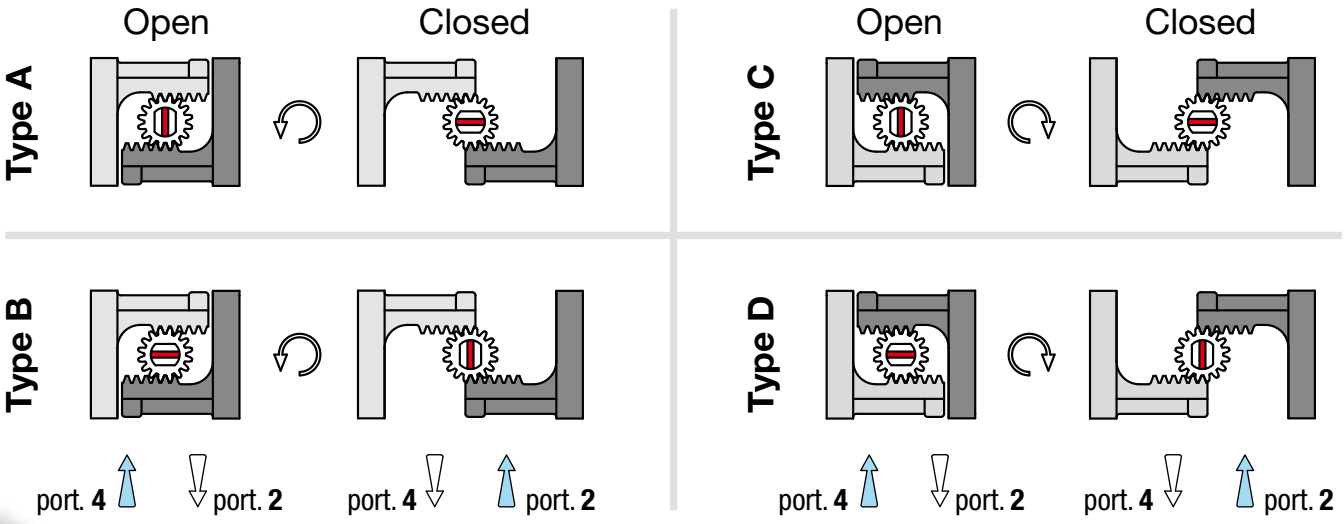

## Principle of operation DA

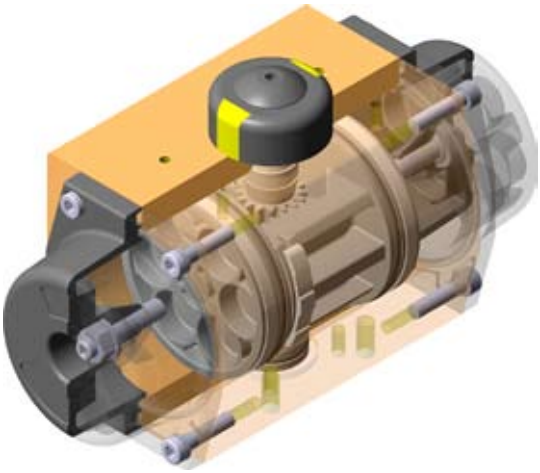

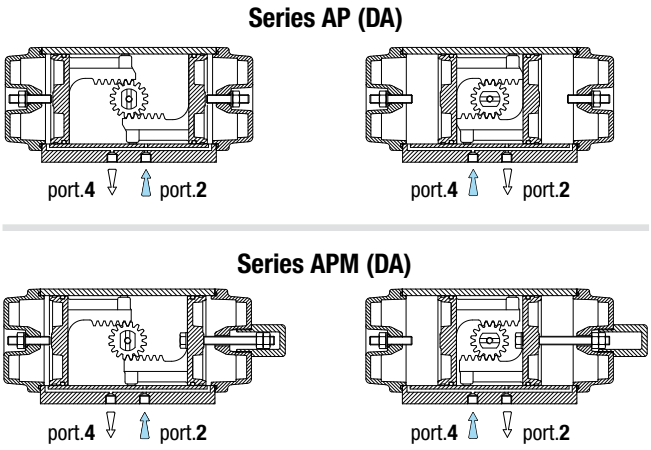


### DOUBLE ACTING ACTUATOR (DA)

Counter clockwise output operation is achieved by inserting pressure into **Port '2'**, to force the pistons apart thus rotating the actuator pinion counter clockwise. During the operation, air from the outer chambers is exhausted through **Port '4'**. Clockwise output operation is achieved by reverse of the above and inserting pressure into **Port '4'**.

### DATA REQUIRED FOR ACTUATOR SIZING

1) Valve torque (min. 25% safety recommended).
2) Double acting or spring return operation.
3) Minimum available operating pressure.

### SELECTION OF DOUBLE ACTING ACTUATORS (DA)

Determine the required valve torque, this should include 25% safety margin, and the minimum operating pressure available. Refer to the pressure/torque table abd select the minimum pressure column applicable. Follow this column down until a value not less than that required is found. Next read across to the left hand column and read the model number to be ordered.
**EXAMPLE:** Valve torque 80Nm plus 25% = 100 Nm Minimum operating pressure 5 bar. By reading down the 5 bar column a figure without below 119 Nm is 123 Nm The model number therefore shown in the left hand column is AP4DA.

**REMARK: the chosen torque valve, which fixes the type of actuator, has never to be lower than the requested torque value of the valve.**

### DOUBLE ACTING TORQUE RATINGS (DA)

| | | OPERATING PRESSURE | | | | | | |
|---|---|---|---|---|---|---|---|---|
| MODEL | bar / p.s.i. | 2 / 30 | 3 / 44 | 4 / 58 | 5 / 73 | 6 / 87 | 7 / 102 | 8 / 116 |
| AP0 DA | N m | 2,4 | 3,6 | 4,8 | 6 | 7,3 | 8,5 | 9,7 |
| | lb f.In | 21.4 | 32.1 | 42.8 | 53.5 | 65.1 | 75.8 | 86.5 |
| AP1 DA | N m | 5,9 | 8,9 | 11,8 | 14,8 | 17,7 | 21,7 | 24,8 |
| | lb f.In | 52.6 | 79.3 | 105.2 | 132 | 157.8 | 193.5 | 221.1 |
| AP2 DA | N m | 9,4 | 14,1 | 18,8 | 23,5 | 28,2 | 32,9 | 37,6 |
| | lb f.In | 83.8 | 125.7 | 167.7 | 209.6 | 251.5 | 293.5 | 335.4 |
| AP3 DA | N m | 20 | 30 | 40 | 50 | 60 | 70 | 80 |
| | lb f.In | 178.4 | 267.6 | 356.8 | 446 | 535.2 | 624.4 | 713.6 |
| AP3.5 DA | N m | 34 | 51 | 68 | 85 | 102 | 119 | 136 |
| | lb f.In | 303.3 | 454.9 | 606.5 | 758.2 | 909 | 1061.5 | 1213.2 |
| AP4 DA | N m | 48 | 71 | 95 | 119 | 142 | 168 | 192 |
| | lb f.In | 428.2 | 633.3 | 847.4 | 1061 | 1266.6 | 1498.5 | 1712.6 |
| AP4.5 DA | N m | 87,2 | 130,8 | 174,4 | 218 | 261,6 | 305,2 | 348,8 |
| | lb f.In | 777.8 | 1166.7 | 1555.6 | 1944.5 | 2333.4 | 2722.3 | 3111.2 |
| AP5 DA | N m | 111 | 167 | 222 | 278 | 333 | 388.5 | 444 |
| | lb f.In | 990.1 | 1489.6 | 1980.2 | 2479.7 | 2970.4 | 3465.4 | 3960.5 |
| AP5.5 DA | N m | 157,6 | 236,4 | 315,3 | 394,1 | 473 | 551,8 | 630,6 |
| | lb f.In | 1405.7 | 2108.6 | 2812.4 | 3515.3 | 4219.1 | 4922 | 5624.9 |
| AP6 DA | N m | 227 | 340 | 454 | 567 | 680 | 794.5 | 908 |
| | lb f.In | 2024.8 | 3032.8 | 4049.6 | 5057.6 | 6065.6 | 7087 | 8099.4 |
| AP8 DA | N m | 426 | 638 | 851 | 1064 | 1276 | 1491 | 1704 |
| | lb f.In | 3800 | 5691 | 7591 | 9491 | 11382 | 13299 | 15200 |
| AP10 DA | N m | 1078 | 1617 | 2156 | 2695 | 3234 | 3773 | 4312 |
| | lb f.In | 9615.8 | 14423.6 | 19231.5 | 24039.4 | 28847.3 | 33655.2 | 38463 |
| AP12 DA | N m | 1880 | 2820 | 3760 | 4701 | 5641 | 6581 | 7522 |
| | lb f.In | 16770 | 25155 | 33539 | 41933 | 50318 | 58703 | 67096 |

NOTE: The output torque of selected actuator mentioned in the table are suitable also for APM series and the value should never be less the required valve torque.

## Principle of operation SR

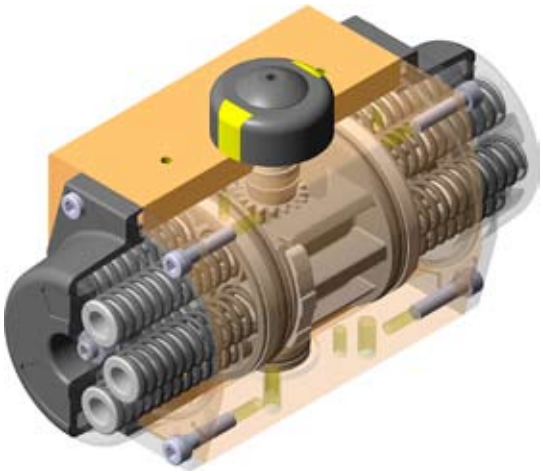

**Series AP (SR)**

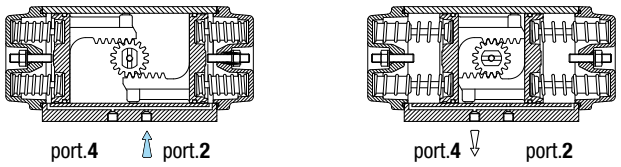


**Series APM (SR)**

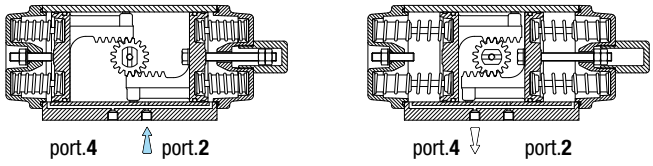


### SPRING RETURN ACTUATORS (SR)

Pressure applied to **Port '2'** will cause the inner chambers to be pressurised, forcing the pistons outward to compress the spring. The pinion is rotated counter counteil clockwise. Upon release of pressure through **Port '2'** the springs will exert pressure to close the pistons and rotate the pinion clockwise rapidly. This action will often be used to close a 90° turn valve in shutdown mode.

### SELECTION OF SPRING RETURN ACTUATORS (SR)

Determine the required valve torque (this should include 25% safety margin), andthe minimum operating pressure available. Select from the **"SPRING STROKE /"0"** table a value that s not less than the required valve torque (including safety margin). Next refer to the pressure table and select under your minimum pressure and **"90"** torque column a figure not less than required (including safety margin).

**EXAMPLE:** Valve torque 60 Nm plus 25% = 75 Nm. Checking the **"SPRING STROKE /"0"** column, it will be noted that the nearest value is 108 Nm. By following the line across to the vertical 5 bar **"90"** torque column, a figure of 109 Nm is shown therefore, the suitable actuators is the **AP5SR5**. In a normal valve shut-down situation the actuator would operate the valve to break out a less than 108 Nm. If the **"90"** torque at operating pressure is too low, continue down the column until an acceptable vlua is found, compare with the corresponding **"SPRING STROKE /"0"** column to ensure that this also is adeguate. This model may be used.

### RIGHT ARRANGEMENT OF SPRINGS



**SR-2** **SR-3** **SR-4** **SR-5** **SR-6**

### SPRING RETURN TORQUE RATINGS (SR)

| MODEL | N° OF SPRINGS FOR EACH SIDE OF CAP | U.M. | SUPPLY PRESSURE | | | | | | | | | | | | SPRING STROKE | |
|---|---|---|---|---|---|---|---|---|---|---|---|---|---|---|---|---|
| | | bar / p.s.i. | 3 / 44 | | 4 / 58 | | 5 / 73 | | 6 / 87 | | 7 / 102 | | 8 / 118 | | | |
| | | | 0° | 90° | 0° | 90° | 0° | 90° | 0° | 90° | 0° | 90° | 0° | 90° | 90° | 0° |
| AP1 SR | 2 | N m | 6,5 | 5,4 | 9,4 | 8,3 | 12,4 | 11,3 | 15,3 | 14,2 | 19,3 | 18,2 | 22,4 | 21,3 | 3,5 | 2,4 |
| | | lb f.in | 58.0 | 48.2 | 83.8 | 74.0 | 110.6 | 100.8 | 136.5 | 126.7 | 172.2 | 162.3 | 199.8 | 190.0 | 31.2 | 21.4 |
| | 3 | N m | 5,3 | 3,7 | 8,2 | 6,6 | 11,2 | 9,6 | 14,1 | 12,5 | 18,1 | 16,5 | 21,2 | 19,6 | 5,2 | 3,6 |
| | | lb f.in | 47.3 | 33.0 | 73.1 | 58.9 | 99.9 | 85.6 | 125.8 | 111.5 | 161.5 | 147.2 | 189.1 | 174.8 | 46.4 | 32.1 |
| | 4 | N m | 4,1 | 1,9 | 7,0 | 4,8 | 10,0 | 7,8 | 12,9 | 10,7 | 16,9 | 14,7 | 20,0 | 17,8 | 7,0 | 4,8 |
| | | lb f.in | 36.6 | 16.9 | 62.4 | 42.8 | 89.2 | 69.6 | 115.1 | 95.4 | 150.7 | 131.1 | 178.4 | 158.8 | 62.4 | 42.8 |
| | 5 | N m | // | // | 3,1 | 2,7 | 8,8 | 6,1 | 11,7 | 9,0 | 15,7 | 13,0 | 18,8 | 16,1 | 8,7 | 6,0 |
| | | lb f.in | // | // | 27.7 | 24.1 | 78.5 | 54.4 | 104.4 | 80.3 | 140.0 | 116.0 | 167.7 | 143.6 | 77.6 | 53.5 |
| | 6 | N m | // | // | // | // | 7,6 | 4,3 | 10,5 | 7,2 | 14,5 | 11,2 | 17,6 | 14,3 | 10,5 | 7,2 |
| | | lb f.in | // | // | // | // | 67.8 | 38.4 | 93.7 | 64.2 | 129.3 | 99.9 | 157.0 | 127.6 | 93.7 | 64.2 |
| AP2 SR | 2 | N m | 10,3 | 8,5 | 15,0 | 13,2 | 19,7 | 17,9 | 24,4 | 22,6 | 29,1 | 27,3 | 33,8 | 32,0 | 5,6 | 3,8 |
| | | lb f.in | 91.9 | 75.8 | 133.8 | 117.7 | 175.7 | 159.7 | 217.6 | 201.6 | 259.6 | 243.5 | 301.5 | 285.4 | 50.0 | 33.9 |
| | 3 | N m | 8,4 | 5,7 | 13,1 | 10,4 | 17,8 | 15,1 | 22,5 | 19,8 | 27,2 | 24,5 | 31,9 | 29,2 | 8,4 | 5,7 |
| | | lb f.in | 74.9 | 50.8 | 116.9 | 92.8 | 158.8 | 134.7 | 200.7 | 176.6 | 242.6 | 218.5 | 284.5 | 260.5 | 74.9 | 50.8 |
| | 4 | N m | // | // | 11,2 | 7,6 | 15,9 | 12,3 | 20,6 | 17,0 | 25,3 | 21,7 | 30,0 | 26,4 | 11,2 | 7,6 |
| | | lb f.in | // | // | 99.9 | 67.8 | 141.8 | 109.7 | 183.8 | 151.6 | 225.7 | 193.6 | 267.6 | 235.5 | 99.9 | 67.8 |
| | 5 | N m | // | // | // | // | 14,0 | 9,5 | 18,7 | 14,2 | 23,4 | 18,9 | 28,1 | 23,6 | 14,0 | 9,5 |
| | | lb f.in | // | // | // | // | 124.9 | 84.7 | 166.8 | 126.7 | 208.7 | 168.6 | 250.7 | 210.5 | 124.9 | 84.7 |
| | 6 | N m | // | // | // | // | 12,1 | 6,7 | 16,8 | 11,4 | 21,5 | 16,1 | 26,2 | 20,8 | 16,8 | 11,4 |
| | | lb f.in | // | // | // | // | 107.9 | 59.8 | 149.9 | 101.7 | 191.8 | 143.6 | 233.7 | 185.5 | 149.9 | 101.7 |
| AP3 SR | 2 | N m | 22,0 | 18,0 | 32,0 | 28,0 | 42,0 | 38,0 | 52,0 | 48,0 | 62,0 | 58,0 | 72,0 | 68,0 | 12,0 | 8,0 |
| | | lb f.in | 196.2 | 160.6 | 285.4 | 249.8 | 374.6 | 339.0 | 463.8 | 428.2 | 553.0 | 517.4 | 642.2 | 606.6 | 107.0 | 71.4 |
| | 3 | N m | 18,0 | 12,0 | 28,0 | 22,0 | 38,0 | 32,0 | 48,0 | 42,0 | 58,0 | 52,0 | 68,0 | 62,0 | 18,0 | 12,0 |
| | | lb f.in | 160.6 | 107.0 | 249.8 | 196.2 | 339.0 | 285.4 | 428.2 | 374.6 | 517.4 | 463.8 | 606.6 | 553.0 | 160.6 | 107.0 |
| | 4 | N m | // | // | 24,0 | 16,0 | 34,0 | 26,0 | 44,0 | 36,0 | 54,0 | 46,0 | 64,0 | 56,0 | 24,0 | 16,0 |
| | | lb f.in | // | // | 214.1 | 142.7 | 303.3 | 231.9 | 392.5 | 321.1 | 481.7 | 410.3 | 570.9 | 499.5 | 214.1 | 142.7 |
| | 5 | N m | // | // | // | // | 30,0 | 20,0 | 40,0 | 30,0 | 50,0 | 40,0 | 60,0 | 50,0 | 30,0 | 20,0 |
| | | lb f.in | // | // | // | // | 267.6 | 178.4 | 356.8 | 267.6 | 446.0 | 356.8 | 535.2 | 446.0 | 267.6 | 178.4 |
| | 6 | N m | // | // | // | // | 26,0 | 14,0 | 36,0 | 24,0 | 46,0 | 34,0 | 56,0 | 44,0 | 36,0 | 24,0 |
| | | lb f.in | // | // | // | // | 231.9 | 124.9 | 321.1 | 214.1 | 410.3 | 303.3 | 499.5 | 392.5 | 321.1 | 214.1 |

| MODEL | N° OF SPRINGS FOR EACH SIDE OF CAP | U.M. | SUPPLY PRESSURE | | | | | | | | | | | | SPRING STROKE | |
|---|---|---|---|---|---|---|---|---|---|---|---|---|---|---|---|---|
| | | bar / p.s.i. | 3 / 44 | | 4 / 58 | | 5 / 73 | | 6 / 87 | | 7 / 102 | | 8 / 118 | | | |
| | | | 0° | 90° | 0° | 90° | 0° | 90° | 0° | 90° | 0° | 90° | 0° | 90° | 90° | 0° |
| AP3.5 SR | 2 | N m | 41,5 | 30,0 | 58,5 | 47,0 | 75,5 | 64,0 | 92,5 | 81,0 | 109,5 | 98,0 | 126,5 | 115,0 | 21,0 | 9,5 |
| | | lb f.in | 370.2 | 267.6 | 521.8 | 419.2 | 673.5 | 570.9 | 825.1 | 722.5 | 976.7 | 874.2 | 1128.4 | 1025.8 | 187.3 | 84.7 |
| | 3 | N m | 32,0 | 20,0 | 49,0 | 37,0 | 66,0 | 54,0 | 83,0 | 71,0 | 100,0 | 88,0 | 117,0 | 105,0 | 31,0 | 19,0 |
| | | lb f.in | 285.4 | 178.4 | 437.1 | 330.0 | 588.7 | 481.7 | 740.4 | 633.3 | 892.0 | 785.0 | 1043.6 | 936.6 | 276.5 | 169.5 |
| | 4 | N m | // | // | 43,0 | 20,0 | 60,0 | 37,0 | 77,0 | 54,0 | 94,0 | 71,0 | 111,0 | 88,0 | 48,0 | 25,0 |
| | | lb f.in | // | // | 383.6 | 178.4 | 535.2 | 330.0 | 686.8 | 481.7 | 838.5 | 633.3 | 990.1 | 785.0 | 428.2 | 223.0 |
| | 5 | N m | // | // | // | // | 53,0 | 33,0 | 70,0 | 50,0 | 87,0 | 67,0 | 104,0 | 84,0 | 52,0 | 32,0 |
| | | lb f.in | // | // | // | // | 472.8 | 294.4 | 624.4 | 446.0 | 776.0 | 597.6 | 927.7 | 749.3 | 463.8 | 285.4 |
| | 6 | N m | // | // | // | // | 47,0 | 22,0 | 64,0 | 39,0 | 81,0 | 56,0 | 106,4 | 73,0 | 63,0 | 38,0 |
| | | lb f.in | // | // | // | // | 419.2 | 196.2 | 570.9 | 347.9 | 722.5 | 499.5 | 949.1 | 651.2 | 562.0 | 339.0 |
| AP4 SR | 2 | N m | 52,7 | 42,4 | 76,7 | 66,4 | 100,7 | 90,4 | 123,7 | 113,4 | 149,7 | 139,4 | 173,7 | 175,2 | 28,6 | 18,3 |
| | | lb f.in | 470.1 | 378.2 | 684.2 | 592.3 | 898.2 | 806.4 | 1103.4 | 1011.5 | 1335.3 | 1243.4 | 1549.4 | 1562.8 | 255.1 | 163.2 |
| | 3 | N m | 43,0 | 28,0 | 67,0 | 52,0 | 91,0 | 76,0 | 114,0 | 99,0 | 140,0 | 125,0 | 164,0 | 153,6 | 43,0 | 28,0 |
| | | lb f.in | 383.6 | 249.8 | 597.6 | 463.8 | 811.7 | 677.9 | 1016.9 | 883.1 | 1248.8 | 1115.0 | 1462.9 | 1370.1 | 383.6 | 249.8 |
| | 4 | N m | // | // | 58,0 | 38,0 | 82,0 | 62,0 | 105,0 | 85,0 | 131,0 | 111,0 | 155,0 | 132,0 | 57,0 | 37,0 |
| | | lb f.in | // | // | 517.4 | 339.0 | 731.4 | 553.0 | 936.6 | 758.2 | 1168.5 | 990.1 | 1382.6 | 1177.4 | 508.4 | 330.0 |
| | 5 | N m | // | // | // | // | 73,0 | 47,0 | 96,0 | 70,0 | 122,0 | 96,0 | 146,0 | 110,4 | 72,0 | 46,0 |
| | | lb f.in | // | // | // | // | 651.2 | 419.2 | 856.3 | 624.4 | 1088.2 | 856.3 | 1302.3 | 948.8 | 642.2 | 410.3 |
| | 6 | N m | // | // | // | // | 64,0 | 33,0 | 87,0 | 56,0 | 113,0 | 82,0 | 137,0 | 88,8 | 86,0 | 55,0 |
| | | lb f.in | // | // | // | // | 570.9 | 294.4 | 776.0 | 499.5 | 1008.0 | 731.4 | 1222.0 | 792.1 | 767.1 | 490.6 |
| AP4.5 SR | 2 | N m | 96,8 | 77,5 | 140,4 | 121,1 | 184,0 | 164,7 | 227,6 | 208,3 | 271,2 | 251,9 | 314,8 | 295,5 | 53,3 | 34,0 |
| | | lb f.in | 950.6 | 761.1 | 1378.7 | 1189.2 | 1806.9 | 1617.4 | 2235.0 | 2045.5 | 2663.2 | 2473.7 | 3091.3 | 2901.8 | 475.4 | 303.2 |
| | 3 | N m | 79,8 | 50,9 | 123,4 | 94,5 | 167,0 | 138,1 | 210,6 | 181,7 | 254,2 | 225,3 | 297,8 | 268,9 | 79,9 | 51,0 |
| | | lb f.in | 783.6 | 499.8 | 1211.8 | 928.0 | 1639.9 | 1356.1 | 2068.1 | 1784.3 | 2496.2 | 2212.4 | 2924.4 | 2640.6 | 712.7 | 454.9 |
| | 4 | N m | // | // | 106,4 | 67,8 | 150,0 | 111,4 | 193,6 | 155,0 | 237,2 | 198,6 | 280,8 | 242,2 | 106,6 | 68,0 |
| | | lb f.in | // | // | 1044.8 | 665.8 | 1473.0 | 1093.9 | 1901.2 | 1522.1 | 2329.3 | 1950.3 | 2757.5 | 2378.4 | 950.8 | 606.5 |
| | 5 | N m | // | // | // | // | 133,0 | 84,7 | 176,6 | 128,3 | 220,2 | 171,9 | 263,8 | 215,5 | 133,3 | 85,0 |
| | | lb f.in | // | // | // | // | 1306.1 | 831.8 | 1734.2 | 1259.9 | 2162.4 | 1688.1 | 2590.5 | 2116.2 | 1189.0 | 758.2 |
| | 6 | N m | // | // | // | // | 116,0 | 58,0 | 159,6 | 101,6 | 203,2 | 145,2 | 246,8 | 188,8 | 160,0 | 102,0 |
| | | lb f.in | // | // | // | // | 1139.1 | 569.6 | 1567.3 | 997.7 | 1995.4 | 1425.9 | 2423.6 | 1854.0 | 1427.2 | 909.8 |
| AP5 SR | 2 | N m | 123,7 | 99,4 | 178,7 | 154,4 | 234,7 | 210,4 | 289,7 | 265,4 | 345,2 | 320,9 | 400,7 | 376,4 | 67,6 | 43,3 |
| | | lb f.in | 1103.4 | 886.6 | 1594.0 | 1377.2 | 2093.5 | 1876.8 | 2584.1 | 2367.4 | 3079.2 | 2862.4 | 3574.2 | 3357.5 | 603.0 | 386.2 |
| | 3 | N m | 103,0 | 66,0 | 158,0 | 121,0 | 214,0 | 177,0 | 269,0 | 232,0 | 324,5 | 287,5 | 380,0 | 343,0 | 101,0 | 64,0 |
| | | lb f.in | 918.8 | 588.7 | 1409.4 | 1079.3 | 1908.9 | 1578.8 | 2399.5 | 2069.4 | 2894.5 | 2564.5 | 3389.6 | 3059.6 | 900.9 | 570.9 |
| | 4 | N m | // | // | 136,0 | 87,0 | 192,0 | 143,0 | 247,0 | 198,0 | 302,5 | 253,5 | 358,0 | 309,0 | 135,0 | 86,0 |
| | | lb f.in | // | // | 1231.1 | 776.0 | 1712.6 | 1275.6 | 2203.2 | 1766.2 | 2698.3 | 2261.2 | 3193.4 | 2756..3 | 1204.2 | 767.1 |
| | 5 | N m | // | // | // | // | 170,0 | 109,0 | 225,0 | 164,0 | 280,5 | 219,5 | 336,0 | 275,0 | 169,0 | 108,0 |
| | | lb f.in | // | // | // | // | 1516.4 | 972.3 | 2007.0 | 1462.9 | 2502.1 | 1957.9 | 2997.1 | 2453.0 | 1507.5 | 963.4 |
| | 6 | N m | // | // | // | // | 148,0 | 75,0 | 203,0 | 130,0 | 258,5 | 185,5 | 314,0 | 241,0 | 203,0 | 130,0 |
| | | lb f.in | // | // | // | // | 1320.2 | 669.0 | 1810.8 | 1159.6 | 2305.8 | 1654.7 | 2800.9 | 2149.7 | 1810.8 | 1159.6 |
| AP5,5 SR | 2 | N m | 179,8 | 136,4 | 258,7 | 215,3 | 337,5 | 294,1 | 416,4 | 373,0 | 495,2 | 451,8 | 574,0 | 530,6 | 100,0 | 56,6 |
| | | lb f.in | 1765.6 | 1339.4 | 2540.4 | 2114.2 | 3314.3 | 2888.1 | 4089.0 | 3662.9 | 4862.9 | 4436.7 | 5636.7 | 5210.5 | 892.0 | 504.8 |
| | 3 | N m | 151,5 | 86,4 | 230,4 | 165,3 | 309,2 | 244,1 | 388,1 | 323,0 | 466,9 | 401,8 | 545,7 | 480,6 | 150,0 | 84,9 |
| | | lb f.in | 1487.7 | 848.4 | 2262.5 | 1623.2 | 3036.3 | 2397.1 | 3811.1 | 3171.9 | 4585.0 | 3945.7 | 5358.8 | 4719.5 | 1338.0 | 757.3 |
| | 4 | N m | // | // | 202,0 | 115,3 | 280,8 | 194,1 | 359,7 | 273,0 | 438,5 | 351,8 | 517,3 | 430,6 | 200,0 | 113,3 |
| | | lb f.in | // | // | 1983.6 | 1132.2 | 2757.5 | 1906.1 | 3532.3 | 2680.9 | 4306.1 | 3454.7 | 5079.9 | 4228.5 | 1784.0 | 1010.6 |
| | 5 | N m | // | // | // | // | 252,5 | 144,1 | 331,4 | 223,0 | 410,2 | 301,8 | 489,0 | 380,6 | 250,0 | 141,6 |
| | | lb f.in | // | // | // | // | 2479.6 | 1415.1 | 3254.3 | 2189.9 | 4028.2 | 2963.7 | 4802.0 | 3737.5 | 2230.0 | 1263.0 |
| | 6 | N m | // | // | // | // | 224,1 | 94,1 | 303,0 | 173,0 | 381,8 | 251,8 | 460,6 | 330,6 | 300,0 | 170,0 |
| | | lb f.in | // | // | // | // | 2200.7 | 924.1 | 2975.5 | 1698.9 | 3749.3 | 2472.7 | 4523.1 | 3246.5 | 2676.0 | 1516.4 |
| AP6 SR | 2 | N m | 257,0 | 200,0 | 371,0 | 314,0 | 484,0 | 427,0 | 597,0 | 540,0 | 711,5 | 654,5 | 825,0 | 768,0 | 140,0 | 83,0 |
| | | lb f.in | 2292.4 | 1784.0 | 3309.3 | 2800.9 | 4317.3 | 3808.8 | 5325.2 | 4816.8 | 6346.6 | 5838.1 | 7359.0 | 6850.6 | 1248.8 | 740.4 |
| | 3 | N m | 215,0 | 130,0 | 329,0 | 244,0 | 442,0 | 357,0 | 555,0 | 470,0 | 669,5 | 584,5 | 783,0 | 698,0 | 210,0 | 125,0 |
| | | lb f.in | 1917.8 | 1159.6 | 2934.7 | 2176.5 | 3942.6 | 3184.4 | 4950.6 | 4192.4 | 5971.9 | 5213.7 | 6984.4 | 6226.2 | 1873.2 | 1115.0 |
| | 4 | N m | // | // | 287,0 | 174,0 | 400,0 | 287,0 | 513,0 | 400,0 | 627,5 | 514,5 | 741,0 | 628,0 | 280,0 | 167,0 |
| | | lb f.in | // | // | 2560.0 | 1552.1 | 3568.0 | 2560.0 | 4576.0 | 3568.0 | 5597.3 | 4589.3 | 6609.7 | 5601.8 | 2497.6 | 1489.6 |
| | 5 | N m | // | // | // | // | 358,0 | 217,0 | 471,0 | 330,0 | 585,5 | 444,5 | 699,0 | 558,0 | 350,0 | 209,0 |
| | | lb f.in | // | // | // | // | 3193.4 | 1935.6 | 4201.3 | 2943.6 | 5222.7 | 3964.9 | 6235.1 | 4977.4 | 3122.0 | 1864.3 |
| | 6 | N m | // | // | // | // | 316,0 | 147,0 | 429,0 | 260,0 | 543,5 | 374,5 | 657,0 | 488,0 | 420,0 | 251,0 |
| | | lb f.in | // | // | // | // | 2818.7 | 1311.2 | 3826.7 | 2319.2 | 4848.0 | 3340.5 | 5860.4 | 4353.0 | 3746.4 | 2238.9 |
| AP8 SR | 2 | N m | 478,0 | 386,0 | 691,0 | 599,0 | 904,0 | 812,0 | 1116,0 | 1024,0 | 1331,0 | 1239,0 | 1704,0 | 1452,0 | 252,0 | 160,0 |
| | | lb f.in | 4263.8 | 3443.1 | 6163.7 | 5343.1 | 8063.7 | 7243.0 | 9954.7 | 9134.1 | 11872.5 | 11051.9 | 15199.7 | 12951.8 | 2247.8 | 1427.2 |
| | 3 | N m | 398,0 | 260,0 | 611,0 | 473,0 | 824,0 | 686,0 | 1036,0 | 898,0 | 1251,0 | 1113,0 | 1464,0 | 1326,0 | 378,0 | 240,0 |
| | | lb f.in | 3550.2 | 2319.2 | 5450.1 | 4219.2 | 7350.1 | 6119.1 | 9241.1 | 8010.2 | 11158.9 | 9928.0 | 13058.9 | 11827.9 | 3371.8 | 2140.8 |
| | 4 | N m | // | // | 531,0 | 347,0 | 744,0 | 560,0 | 956,0 | 772,0 | 1171,0 | 987,0 | 1384,0 | 1200,0 | 504,0 | 320,0 |
| | | lb f.in | // | // | 4736.5 | 3095.2 | 6636.5 | 4995.2 | 8527.5 | 6886.2 | 10445.3 | 8804.0 | 12345.3 | 10704.0 | 4495.7 | 2854.4 |
| | 5 | N m | // | // | // | // | 664,0 | 434,0 | 876,0 | 646,0 | 1091,0 | 861,0 | 1304,0 | 1074,0 | 630,0 | 400,0 |
| | | lb f.in | // | // | // | // | 5922.9 | 3871.3 | 7813.9 | 5762.3 | 9731.7 | 7680.1 | 11631.7 | 9580.1 | 5619.6 | 3568.0 |
| | 6 | N m | // | // | // | // | 584,0 | 308,0 | 796,0 | 520,0 | 1011,0 | 735,0 | 1224,0 | 948,0 | 756,0 | 480,0 |
| | | lb f.in | // | // | // | // | 5209.3 | 2747.4 | 7100.3 | 4638.4 | 9018.1 | 6556.2 | 10918.1 | 8456.2 | 6743.5 | 4281.6 |
| AP10 SR | 2 | N m | 1181,0 | 957,0 | 1720,0 | 1496,0 | 2259,0 | 2035,0 | 2798,0 | 2574,0 | 3337,0 | 3113,0 | 3876,0 | 3652,0 | 660,0 | 436,0 |
| | | lb f.in | 11597.4 | 9397.7 | 16890.4 | 14690.7 | 22183.4 | 19983.7 | 27476.4 | 25276.7 | 32769.3 | 30569.7 | 38062.3 | 35862.6 | 6481.2 | 4281.5 |
| | 3 | N m | 963,0 | 628,0 | 1502,0 | 1167,0 | 2041,0 | 1706,0 | 2580,0 | 2245,0 | 3119,0 | 2784,0 | 3658,0 | 3323,0 | 989,0 | 654,0 |
| | | lb f.in | 9456.7 | 6167.0 | 14749.6 | 11459.9 | 20042.6 | 16752.9 | 25335.6 | 22045.9 | 30628.6 | 27338.9 | 35921.6 | 32631.9 | 9712.0 | 6422.3 |
| | 4 | N m | // | // | 1284,0 | 837,0 | 1823,0 | 1376,0 | 2362,0 | 1915,0 | 2901,0 | 2454,0 | 3440,0 | 2993,0 | 1319,0 | 872,0 |
| | | lb f.in | // | // | 12608.9 | 8219.3 | 17901.9 | 13512.3 | 23194.8 | 18805.3 | 28487.8 | 24098.3 | 33780.8 | 29391.3 | 12952.6 | 8563.0 |
| | 5 | N m | // | // | // | // | 1605,0 | 1046,0 | 2144,0 | 1585,0 | 2683,0 | 2124,0 | 3222,0 | 2663,0 | 1649,0 | 1090,0 |
| | | lb f.in | // | // | // | // | 15761.1 | 10271.7 | 21054.1 | 15564.7 | 26347.1 | 20857.7 | 31640.0 | 26150.7 | 16193.2 | 10703.8 |
| | 6 | N m | // | // | // | // | // | // | 1909,0 | 1254,0 | 2448,0 | 1793,0 | 2987,0 | 2332,0 | 1980,0 | 1325,0 |
| | | lb f.in | // | // | // | // | // | // | 18746.4 | 12314.3 | 24039.4 | 17607.3 | 29332.3 | 22900.2 | 19443.6 | 13011.5 |
| AP12 SR | 2 | N m | 2082,0 | 1723,0 | 3022,0 | 2663,0 | 3963,0 | 3604,0 | 4903,0 | 4544,0 | 5843,0 | 5484,0 | 6783,0 | 6424,0 | 1097,0 | 738,0 |
| | | lb f.in | 20445.2 | 16919.9 | 29676.0 | 26150.7 | 38916.7 | 35391.3 | 48147.5 | 44622.1 | 57378.3 | 53852.9 | 66609.1 | 63083.7 | 10772.5 | 7247.2 |
| | 3 | N m | 1715,0 | 1174,0 | 2655,0 | 2114,0 | 3596,0 | 3055,0 | 4536,0 | 3995,0 | 5476,0 | 4935,0 | 6416,0 | 5875,0 | 1646,0 | 1105,0 |
| | | lb f.in | 16841.3 | 11528.7 | 26072.1 | 20759.5 | 35312.7 | 30000.1 | 44543.5 | 39230.9 | 53774.3 | 48461.7 | 63005.1 | 57692.5 | 16163.7 | 10851.1 |
| | 4 | N m | // | // | 2286,0 | 1565,0 | 3227,0 | 2506,0 | 4167,0 | 3446,0 | 5107,0 | 4386,0 | 6047,0 | 5326,0 | 2195,0 | 1474,0 |
| | | lb f.in | // | // | 22448.5 | 15368.3 | 31689.1 | 24608.9 | 40919.9 | 33839.7 | 50150.7 | 43070.5 | 59381.5 | 52301.3 | 21554.9 | 14474.7 |
| | 5 | N m | // | // | // | // | 2859,0 | 1958,0 | 3799,0 | 2898,0 | 4739,0 | 3838,0 | 5679,0 | 4778,0 | 2743,0 | 1842,0 |
| | | lb f.in | // | // | // | // | 28075.4 | 19227.6 | 37306.2 | 28458.4 | 46537.0 | 37689.2 | 55767.8 | 46920.0 | 26936.3 | 18088.4 |
| | 6 | N m | // | // | // | // | // | // | 3430,0 | 2349,0 | 4370,0 | 3289,0 | 5310,0 | 4229,0 | 3292,0 | 2211,0 |
| | | lb f.in | // | // | // | // | // | // | 33682.6 | 23067.2 | 42913.4 | 32298.0 | 52144.2 | 41528.8 | 32327.4 | 21712.0 |

NOTE: The output torque of selected actuator mentioned in the table are suitable also for APM series and the value should never be less the required valve torque.

# Technical features Pneumatic Actuator AP0÷AP12

| | |
|---|---|
| **Series** | AP / APM<br>DA Double Acting / SA Single Acting |
| **Size range** | AP0 ÷ AP12 (Ø32 mm to Ø330 mm) |
| **Stroke** | 90° with single travel adjustment ±3° (AP series)<br>90° with double travel adjustment ±5° (APM series) |
| **Pressure range** | 2 bar ÷ 8 bar for Double Acting<br>3 bar ÷ 8 bar for Single Acting |
| **Torque range** | 2,4 ÷ 7500 Nm (21,4 ÷ 66875 lbf.in) |
| **Operating temperature** | -20 °C ÷ +80 °C (-4 °F ÷ +175 °F) standard |
| **Design reference** | UNI EN 15714-3, ISO 5211, VDI / VDE 3845 |
| **Flange interface** | ISO 5211 |
| **Stem connection** | Square or polygonal shape ISO 5211 |
| **Interface for pilot valve** | NAMUR type |
| **Accessories flange** | VDI / VDE 3845, UNI EN 15714-3 |
| **Applications** | They find their best application for actuation of quarter turn valves, such as: ball valve, butterfly valve, plug valve |
| **Certifications** | 2014/34//UE ATEX, SIL IEC 61508 - IEC 61511<br>GOST-R, CU TR 10 CU TR 32 |

### Air consuption for stroke (free air) - Liters

| Model | AP1 DA/SR | AP2 DA/SR | AP3 DA/SR | AP3,5 DA/SR | AP4 DA/SR | AP4,5 DA/SR | AP5 DA/SR | AP5,5 DA/SR | AP6 DA/SR | AP8 DA/SR | AP10 DA/SR | AP12 DA/SR |
|---|---|---|---|---|---|---|---|---|---|---|---|---|
| **Counter clockwise** | 0,08 | 0,12 | 0,24 | 0,48 | 0,68 | 1,00 | 1,40 | 1,60 | 3,20 | 5,30 | 14,20 | 22,00 |
| **Clockwise (DA only)** | 0,10 | 0,16 | 0,44 | 0,56 | 0,96 | 1,60 | 2,16 | 2,56 | 4,00 | 8,60 | 16,50 | 49,00 |

### Air consuption for stroke (free air) - Cu.ft.

| Model | AP1 DA/SR | AP2 DA/SR | AP3 DA/SR | AP3,5 DA/SR | AP4 DA/SR | AP4,5 DA/SR | AP5 DA/SR | AP5,5 DA/SR | AP6 DA/SR | AP8 DA/SR | AP10 DA/SR | AP12 DA/SR |
|---|---|---|---|---|---|---|---|---|---|---|---|---|
| **Counter clockwise** | 0,0030 | 0,004 | 0,008 | 0,017 | 0,024 | 0,035 | 0,049 | 0,057 | 0,11 | 0,19 | 0,50 | 0,78 |
| **Clockwise (DA only)** | 0,0035 | 0,006 | 0,016 | 0,020 | 0,034 | 0,057 | 0,076 | 0,09 | 0,14 | 0,30 | 0,59 | 1,75 |

### Weights (Kg)

| Model (DA) | AP1 APM1 | | AP2 APM2 | | AP3 APM3 | | AP3,5 APM3,5 | | AP4 APM4 | | AP4,5 APM4,5 | | AP5 APM5 | | AP5,5 APM5,5 | | AP6 APM6 | | AP8 APM8 | | AP10 APM10 | | AP12 APM12 | |
|---|---|---|---|---|---|---|---|---|---|---|---|---|---|---|---|---|---|---|---|---|---|---|---|---|
| | 1,00 | 1,05 | 1,42 | 1,44 | 2,54 | 2,62 | 3,68 | 3,78 | 5,10 | 5,15 | 8,24 | 8,33 | 10,10 | 10,38 | 13,94 | 14,86 | 19,66 | 20,40 | 36,60 | 37,70 | 77,00 | 78,30 | 150,00 | 156,00 |

| Model (SR) | AP1 APM1 | | AP2 APM2 | | AP3 APM3 | | AP3,5 APM3,5 | | AP4 APM4 | | AP4,5 APM4,5 | | AP5 APM5 | | AP5,5 APM5,5 | | AP6 APM6 | | AP8 APM8 | | AP10 APM10 | | AP12 APM12 | |
|---|---|---|---|---|---|---|---|---|---|---|---|---|---|---|---|---|---|---|---|---|---|---|---|---|
| | 1,12 | 1,16 | 1,56 | 1,60 | 3,10 | 3,18 | 4,30 | 4,40 | 6,20 | 6,25 | 9,67 | 9,76 | 12,62 | 12,90 | 17,09 | 18,01 | 23,86 | 24,60 | 44,82 | 45,93 | 101,00 | 102,30 | 192,00 | 198,00 |

Weights considering 6 (six) spring on each side of the caps

### Weights (lbs)

| Model (DA) | AP1 APM1 | | AP2 APM2 | | AP3 APM3 | | AP3,5 APM3,5 | | AP4 APM4 | | AP4,5 APM4,5 | | AP5 APM5 | | AP5,5 APM5,5 | | AP6 APM6 | | AP8 APM8 | | AP10 APM10 | | AP12 APM12 | |
|---|---|---|---|---|---|---|---|---|---|---|---|---|---|---|---|---|---|---|---|---|---|---|---|---|
| | 2.20 | 2.31 | 3.13 | 3.17 | 5.60 | 5.78 | 8.11 | 8.33 | 11.24 | 11.35 | 18.17 | 18.36 | 22.27 | 22.88 | 30.73 | 32.76 | 43.34 | 44.97 | 80.69 | 83.11 | 169.76 | 172.62 | 330.69 | 343.92 |

| Model (SR) | AP1 APM1 | | AP2 APM2 | | AP3 APM3 | | AP3,5 APM3,5 | | AP4 APM4 | | AP4,5 APM4,5 | | AP5 APM5 | | AP5,5 APM5,5 | | AP6 APM6 | | AP8 APM8 | | AP10 APM10 | | AP12 APM12 | |
|---|---|---|---|---|---|---|---|---|---|---|---|---|---|---|---|---|---|---|---|---|---|---|---|---|
| | 2.47 | 2.56 | 3.44 | 3.53 | 6.83 | 7.01 | 9.48 | 9.70 | 13.67 | 13.78 | 21.32 | 21.52 | 27.82 | 28.44 | 37.68 | 39.71 | 52.60 | 54.23 | 98.81 | 101.26 | 222.67 | 225.53 | 423.29 | 436.51 |

Weights considering 6 (six) spring on each side of the caps

### Opening / Closing Time (sec) at 5,5 bar - (80 p.s.i.)

| Model | AP1 | AP2 | AP3 | AP3,5 | AP4 | AP4,5 | AP5 | AP5,5 | AP6 | AP8 | AP10 | AP12 |
|---|---|---|---|---|---|---|---|---|---|---|---|---|
| **Double Acting (DA)** | Less than 0,5 | Less than 1 | Less than 1 | Less than 1 | Less than 1 | Less than 1 | Less than 1,25 | Less than 1,5 | 1,5 - 2 | 3 - 4 | 5 - 6 | 5 - 6 |
| **Spring Return (SR)** | Less than 0,5 | Less than 1 | Less than 1 | Less than 1 | Less than 1 | Less than 1 | 1,5 - 2 | Less than 2 | 2 - 3 | 4 - 6 | 7 - 8 | 7 - 8 |

NOTE: The times indicated above are refer to bench-trial without torque applied. Actuator power supply: 5 bar.

NOTE: **AP0 model** see page 7 →

## Exploded view Pneumatic Actuator AP0 DA - Standard material configuration

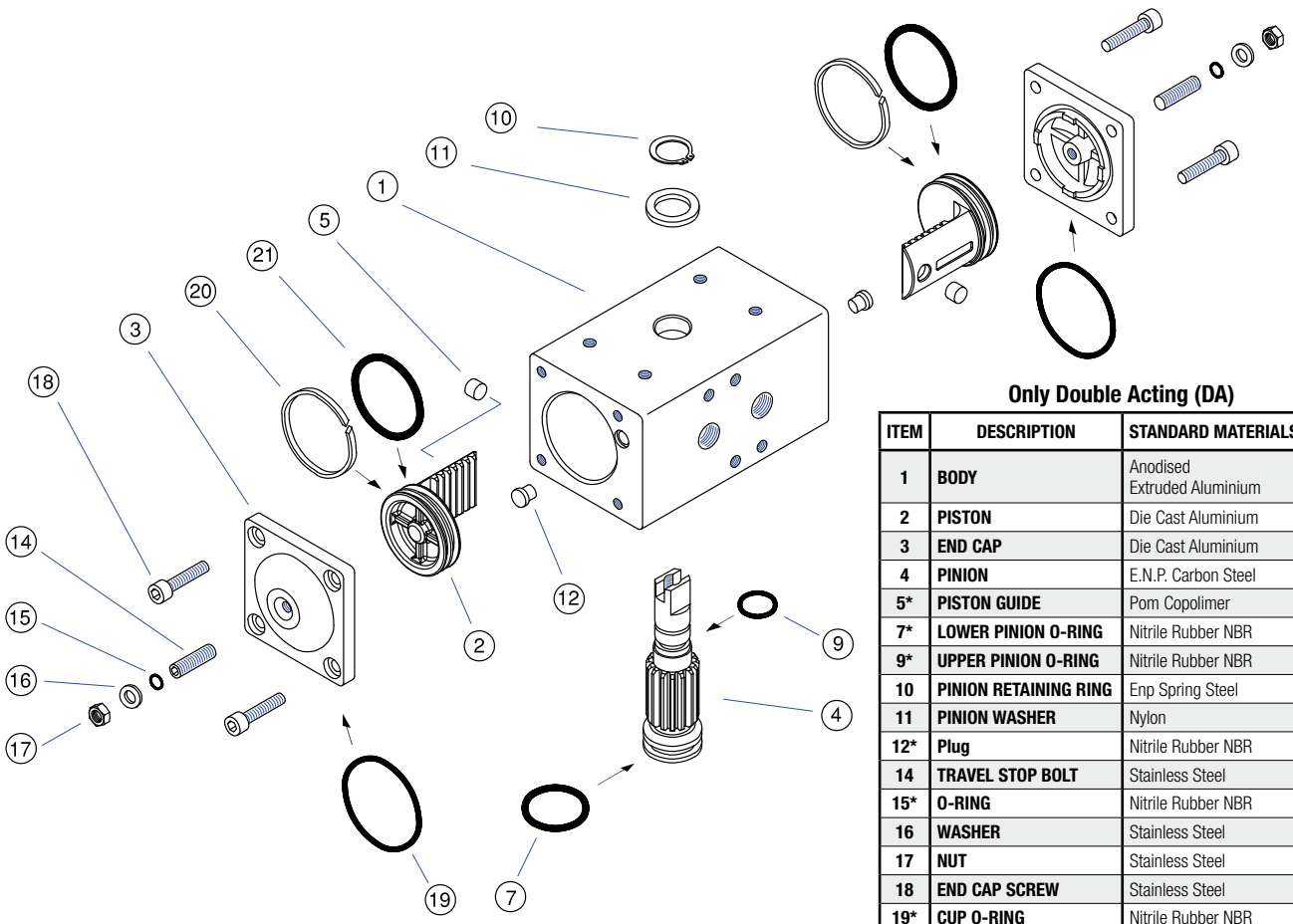


**Only Double Acting (DA)**

| ITEM | DESCRIPTION | STANDARD MATERIALS | Q.TY |
|---|---|---|---|
| 1 | BODY | Anodised Extruded Aluminium | 1 |
| 2 | PISTON | Die Cast Aluminium | 2 |
| 3 | END CAP | Die Cast Aluminium | 2 |
| 4 | PINION | E.N.P. Carbon Steel | 1 |
| 5* | PISTON GUIDE | Pom Copolimer | 2 |
| 7* | LOWER PINION O-RING | Nitrile Rubber NBR | 1 |
| 9* | UPPER PINION O-RING | Nitrile Rubber NBR | 1 |
| 10 | PINION RETAINING RING | Enp Spring Steel | 1 |
| 11 | PINION WASHER | Nylon | 1 |
| 12* | Plug | Nitrile Rubber NBR | 2 |
| 14 | TRAVEL STOP BOLT | Stainless Steel | 2 |
| 15* | O-RING | Nitrile Rubber NBR | 2 |
| 16 | WASHER | Stainless Steel | 2 |
| 17 | NUT | Stainless Steel | 2 |
| 18 | END CAP SCREW | Stainless Steel | 8 |
| 19* | CUP O-RING | Nitrile Rubber NBR | 2 |
| 20* | PISTON RING | Nylon | 2 |
| 21* | PISTON O-RING | Nitrile Rubber NBR | 2 |

* Suggested spare parts for maintenance included in spare parts kit

## Overall dimensions - Technical features Pneumatic Actuator AP0 DA

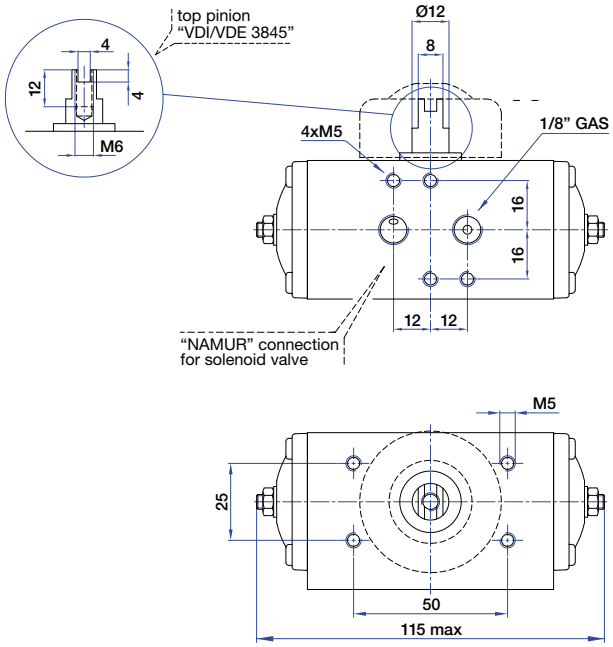


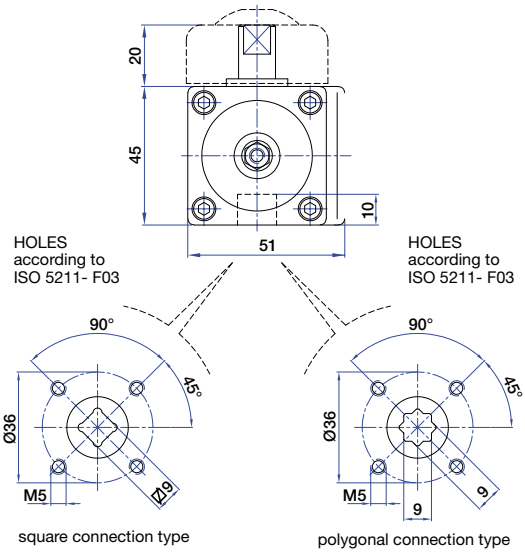


**TORQUE OUTPUT DOUBLE ACTING (DA)**

| | OPERATING PRESSURE | | | | | | |
|---|---|---|---|---|---|---|---|
| bar / p.s.i. | 2 / 29 | 3 / 44 | 4 / 58 | 5 / 73 | 6 / 87 | 7 / 102 | 8 / 116 |
| N m | 2,4 | 3,6 | 4,8 | 6,0 | 7,3 | 8,5 | 9,7 |
| lb f.In | 21.4 | 32.1 | 42.8 | 53.5 | 65.1 | 75.8 | 86.5 |

**AIR CONSUMPTION FOR STROKE (FREEAIR)**

| | | |
|---|---|---|
| Counter Clockwise | Liters | 0,04 |
| | Cu.ft. | 0.0014 |
| Clockwise (DA only) | Liters | 0,05 |
| | Cu.ft. | 0.0018 |

**OPENING/CLOSING TIME (sec.) at 5.6 bar/80 p.s.i.**

| | |
|---|---|
| Double Acting | Less than 0,5 sec. |

Weight: Kg 0,51 - lbs. 1.12

# Exploded view Pneumatic Actuator AP1÷ AP10 - Standard material configuration

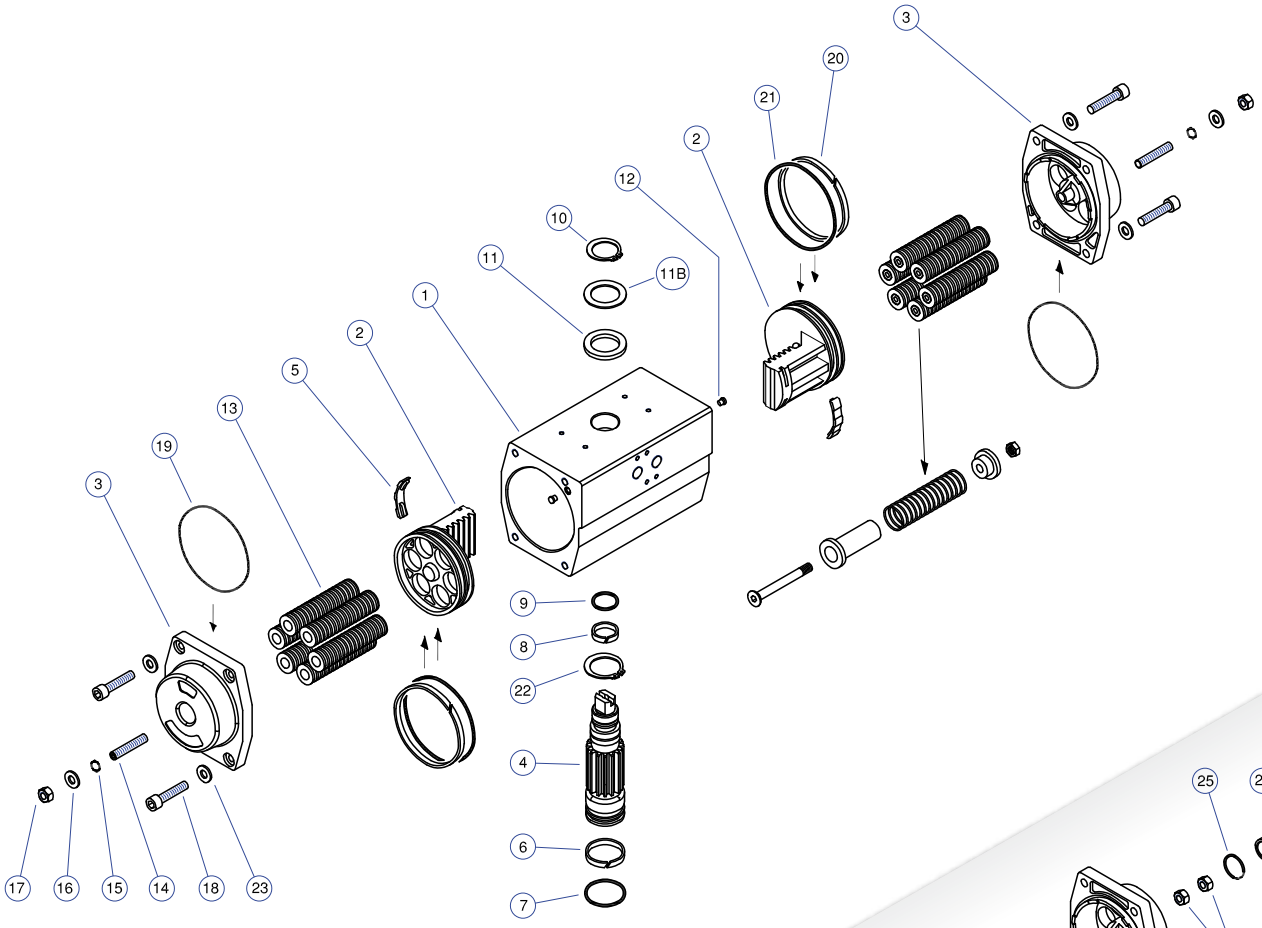


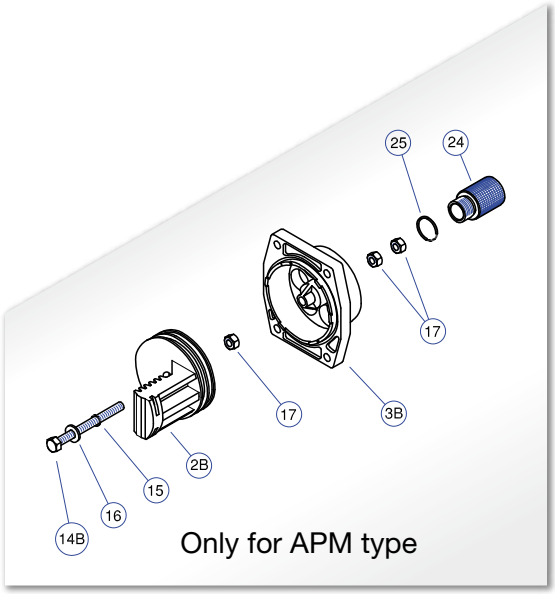


**Double Acting (DA) and Spring Return (SR)**

| ITEM | DESCRITPION | STANDARD MATERIALS | QUANTITY AP | QUANTITY APM |
|---|---|---|---|---|
| 1 | **BODY** | Anodised Extruded Aluminium | 1 | 1 |
| 2 | **PISTON** | Die Cast Aluminium | 2 | 1 |
| 2B | **PISTON** | Die Cast Aluminium | 0 | 1 |
| 3 | **END CAP** | Die Cast Aluminium | 2 | 1 |
| 3B | **END CAP** | Die Cast Aluminium | 0 | 1 |
| 4 | **PINION** | E.N.P. Carbon Steel | 1 | 1 |
| 5* | **PISTON GUIDE** | Pom Copolimer | 2 | 2 |
| 6* | **LOWER PINION** | Ring Nylon | 1 | 1 |
| 7* | **LOWER PINION O-RING** | Nitrile Rubber NBR | 1 | 1 |
| 8* | **UPPER PINION RING** | Nylon | 1 | 1 |
| 9* | **UPPER PINION O-RING** | Nitrile Rubber NBR | 1 | 1 |
| 10 | **PINION RETAINING RING** | Enp Spring Steel | 1 | 1 |
| 11 | **PINION WASHER** | Nylon | 1 | 1 |
| 11B | **STEEL PINION WASHER** (only for AP10 model) | E.N.P. Carbon Steel | 1 | 1 |
| 12* | **PLUG** | Nitrile Rubber NBR | 2 | 2 |
| 13 | **SPIRING (Cartridge)** | Spring Steel Coated | 4÷12 | 4÷12 |
| 14 | **TRAVEL STOP BOLT** | Stainless Steel | 2 | 1 |
| 14B | **TRAVEL STOP SCREW** | Stainless Steel | 0 | 1 |
| 15* | **O-RING** | Nitrile Rubber NBR | 2 | 1 |
| 16 | **WASHER** | Stainless Steel | 2 | 2 |
| 17 | **NUT** | Stainless Steel | 2 | 4 |
| 18 | **END CAP SCREW** | Stainless Steel | 8 | 8 |
| 19* | **CUP O-RING** | Nitrile Rubber NBR | 2 | 2 |
| 21* | **PISTON O-RING** | Nitrile Rubber NBR | 2 | 2 |
| 22 | **INTERNAL PINION RETAINING RING** (on request) | Enp Spring Steel | 1 | 1 |
| 23 | **WASHER SCREW** | Stainless Steel | 4÷8 | 4÷8 |
| 24 | **CUP PLUG** | Aluminium | 0 | 1 |
| 25* | **O-RING** | Nitrile Rubber NBR | 0 | 1 |

* Suggested spare parts for maintenance included in spare parts kit

# Overall dimensions AP1÷ AP10

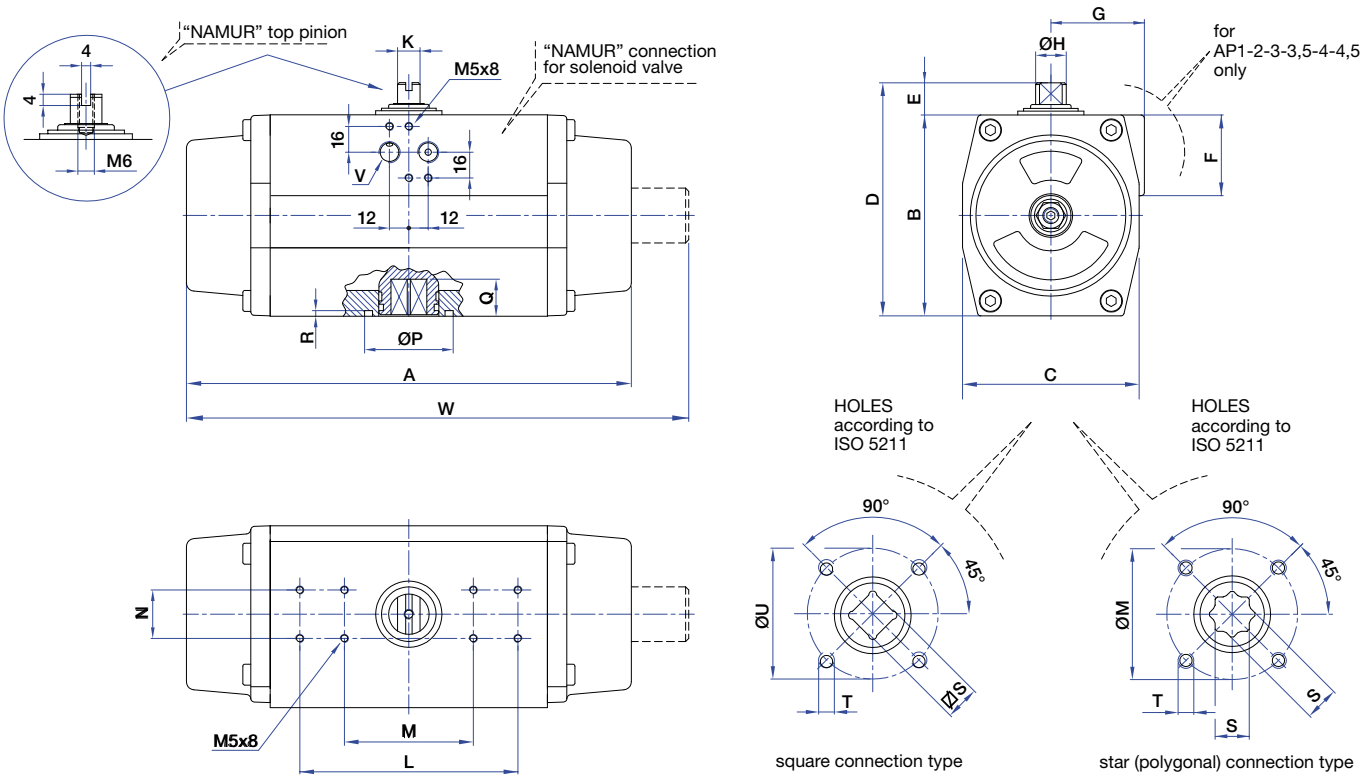


| MODEL | U.M. | A | W* | B | C | D | E | F | G | H | K | L | M | N | P | Q | R | ⊠ S-S H11 | T | U | V* | ISO 5211 std | ISO 5211 spec |
|---|---|---|---|---|---|---|---|---|---|---|---|---|---|---|---|---|---|---|---|---|---|---|---|
| AP1 DA/SR | mm | 142 | 162 | 67 | 60 | 87 | 20 | 42 | 41 | 12 | 8 | // | 80 | 30 | 25 | 10 | 2 | 9/11** | M5/M6 | 36/50 | 1/8" | F03/F05 | F04 |
| | ins. | 5.59 | 6.38 | 2.64 | 2.36 | 3.43 | 0.79 | 1.65 | 1.61 | 0.47 | 0.31 | // | 3.15 | 1.18 | 0.98 | 0.39 | 0.08 | 0.35/0.43** | | 1.42/1.97 | | | |
| AP2 DA/SR | mm | 155 | 171 | 83 | 73 | 103 | 20 | 42 | 44,5 | 12 | 8 | // | 80 | 30 | 30 / 35 | 12 | 2 | 11/14** | M5/M6 | 42/50 | 1/4" | *** F04 or F05 | // |
| | ins. | 6.10 | 6.73 | 3.27 | 2.87 | 4.06 | 0.79 | 1.65 | 1.75 | 0.47 | 0.31 | // | 3.15 | 1.18 | 1.18/1.38 | 0.47 | 0.08 | 0.43/0.55** | | 1.65/1.97 | | | |
| AP3 DA/SR | mm | 213 | 240 | 100 | 85 | 120 | 20 | 50 | 49,5 | 14 | 10 | // | 80 | 30 | 35 | 16 | 2 | 14/17** | M6/M8 | 50/70 | 1/4" | F05/F07 | // |
| | ins. | 8.33 | 9.45 | 3.94 | 3.35 | 4.72 | 0.79 | 1.97 | 1.95 | 0.55 | 0.39 | // | 3.15 | 1.18 | 1.38 | 0.63 | 0.12 | 0.43/0.67** | | 1.97/2.76 | | | |
| AP3.5 DA/SR | mm | 236 | 268 | 110 | 98 | 130 | 20 | 50 | 53 | 19 | 14 | // | 80 | 30 | 55 | 20 | 3,5 | 17/22** | M8 | 70 | 1/4" | F07 | F05 |
| | ins. | 9.29 | 10.55 | 4.33 | 3.86 | 5.12 | 0.79 | 1.97 | 2.09 | 0.75 | 0.55 | // | 3.15 | 1.18 | 2.17 | 0.79 | 0.14 | 0.67/0.87** | | 2.76 | | | |
| AP4 DA/SR | mm | 276 | 304 | 125 | 110 | 145 | 20 | 50 | 58 | 19 | 14 | // | 80 | 30 | 55 | 20 | 3,5 | 17/22** | M8/M10 | 70/102 | 1/4" | F07/F10 | // |
| | ins. | 10.87 | 11.97 | 4.92 | 4.33 | 5.71 | 0.79 | 1.97 | 2.28 | 0.75 | 0.55 | // | 3.15 | 1.18 | 2.17 | 0.79 | 0.14 | 0.67/0.87** | | 2.76/4.02 | | | |
| AP4.5 DA/SR | mm | 310 | 350 | 142 | 128 | 172 | 30 | 58 | 69 | 28 | 20 | 130 | 80 | 30 | 70 | 24 | 3,5 | 17**/22 | M10 | 102 | 1/4" | F10 | F07 |
| | ins. | 12.20 | 13.78 | 5.59 | 5.04 | 6.77 | 1.18 | 2.28 | 2.72 | 1.10 | 0.79 | 5.12 | 3.15 | 1.18 | 2.76 | 0.94 | 0.14 | 0.67**/0.87 | | 4.02 | | | |
| AP5 DA/SR | mm | 366 | 405 | 155 | 140 | 185 | 30 | // | // | 28 | 20 | 130 | 80 | 30 | 70 | 24 | 3,5 | 17**/22 | M10 | 102 | 1/4" | F10 | F07/F12 |
| | ins. | 14.41 | 15.94 | 6.10 | 5.51 | 7.28 | 1.18 | // | // | 1.10 | 0.79 | 5.12 | 3.15 | 1.18 | 2.76 | 0.94 | 0.14 | 0.67**/0.87 | | 4.02 | | | |
| AP5.5 DA/SR | mm | 388 | 442 | 176 | 160 | 206 | 30 | // | // | 36 | 28 | 130 | 80 | 30 | 85 | 29 | 3,5 | 22**/27 | M12 | 125 | 1/4" | F12 | F10 |
| | ins. | 15.27 | 17.40 | 6.93 | 6.30 | 8.11 | 1.18 | // | // | 1.42 | 1.10 | 5.12 | 3.15 | 1.18 | 3.35 | 1.14 | 0.14 | 0.87**/1.06 | | 4.92 | | | |
| AP6 DA/SR | mm | 468 | 500 | 200 | 175 | 230 | 30 | // | // | 36 | 28 | 130 | 80 | 30 | 85 | 29 | 3,5 | 22**/27 | M12 | 125 | 1/4" | F12 | F10 |
| | ins. | 18.42 | 19.68 | 7.87 | 6.89 | 9.06 | 1.18 | // | // | 1.42 | 1.10 | 5.12 | 3.15 | 1.18 | 3.35 | 1.14 | 0.14 | 0.87**/1.06 | | 4.92 | | | |
| AP8 DA/SR | mm | 563 | 612 | 250 | 215 | 300 | 30 | // | // | 48 | 32 | 130 | // | 30 | 100 | 38 | 5 | 27**/36 | M16 | 140 | F14 | F14 | F12 |
| | ins. | 22.16 | 24.09 | 9.84 | 8.46 | 11.81 | 1.97 | // | // | 1.89 | 1.26 | 5.12 | // | 1.18 | 3.94 | 1.50 | 0.20 | 1.06**/1.42 | | 5.51 | | | |
| AP10 DA/SR | mm | 750 | 838 | 335 | 290 | 385 | 50 | // | // | 48 | 32 | 130 | // | 30 | 130 | 50 | 5 | 36**/46 | M20 | 165 | 1/4" | F16 | F14 |
| | ins. | 29.53 | 32.99 | 13.19 | 11.42 | 15.16 | 1.97 | // | // | 1.89 | 1.26 | 5.12 | // | 1.18 | 5.12 | 1.97 | 0.20 | 1.42**/1.81 | | 6.50 | | | |

W* dimension only for APM series

** S dimension with (**) only request

V* dimensions threated GAS or NPT

*** To be chosen when ordering

## Exploded view Pneumatic Actuator AP12 - Standard material configuration (only APM Type)

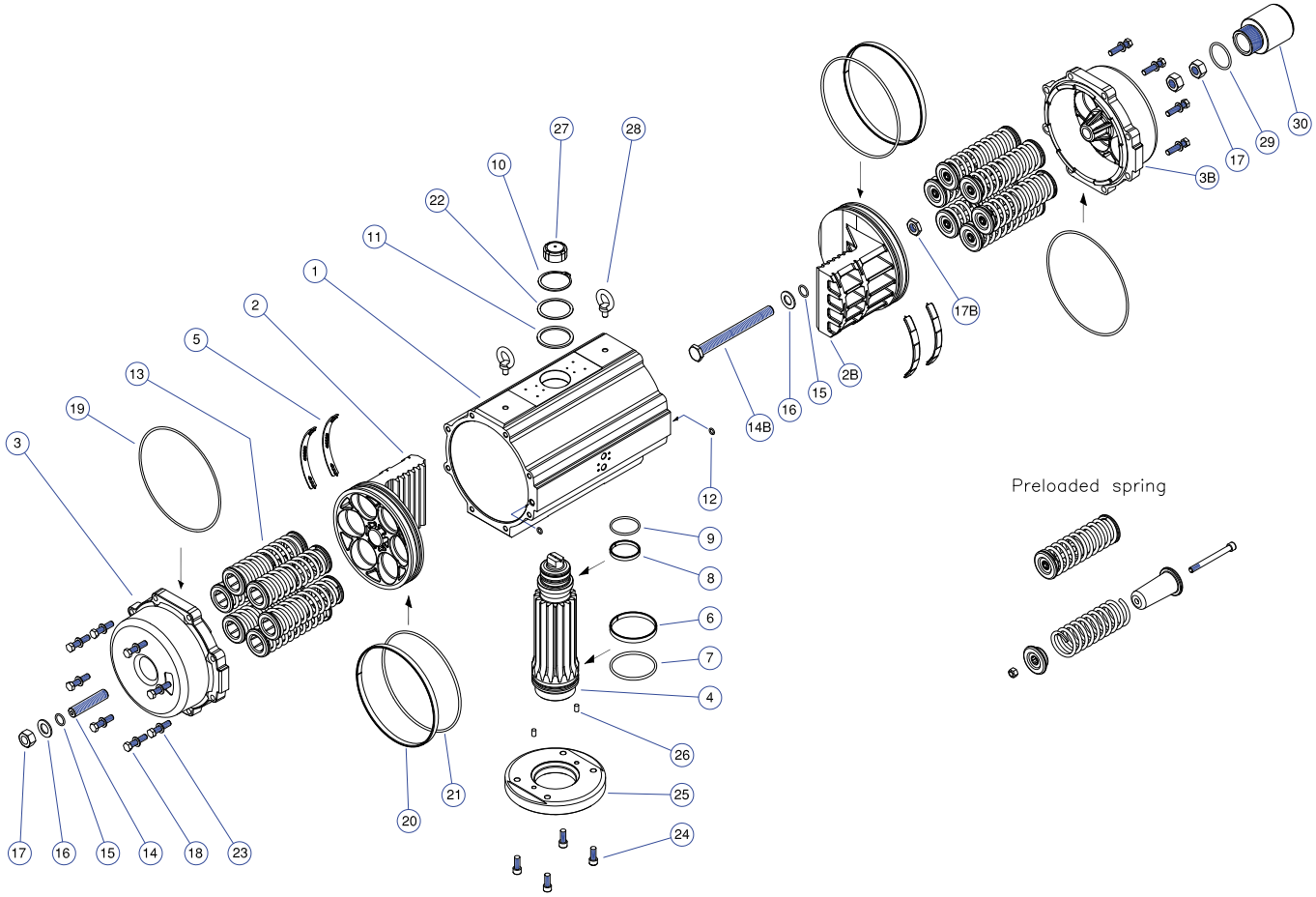


**Double Acting (DA) and Spring Return (SR)**

| ITEM | DESCRITPION | STANDARD MATERIALS | QUANTITY AP | QUANTITY APM |
|---|---|---|---|---|
| 1 | BODY | Anodised Extruded Aluminium | 1 | 1 |
| 2 | PISTON | Die Cast Aluminium | 2 | 1 |
| 2B | PISTON | Die Cast Aluminium | 0 | 1 |
| 3 | END CAP | Die Cast Aluminium | 2 | 1 |
| 3B | END CAP | Die Cast Aluminium | 0 | 1 |
| 4 | PINION | E.N.P. Carbon Steel | 1 | 1 |
| 5* | PISTON GUIDE | Pom Copolimer | 4 | 4 |
| 6* | LOWER PINION RING | Nylon | 1 | 1 |
| 7* | LOWER PINION O-RING | Nitrile Rubber NBR | 1 | 1 |
| 8* | UPPER PINION RING | Nylon | 1 | 1 |
| 9* | UPPER PINION O-RING | Nitrile Rubber NBR | 1 | 1 |
| 10 | PINION RETAINING RING | Enp Spring Steel | 1 | 1 |
| 11 | PINION WASHER | Nylon | 1 | 1 |
| 12* | O-RING | Nitrile Rubber NBR | 2 | 2 |
| 13 | SPIRING (Cartridge) | Spring Steel Coated | 4÷12 | 4÷12 |
| 14 | TRAVEL STOP BOLT | Stainless Steel | 2 | 1 |
| 14B | TRAVEL STOP SCREW | Stainless Steel | 0 | 1 |
| 15* | O-RING | Nitrile Rubber NBR | 2 | 1 |
| 16 | WASHER | Stainless Steel | 2 | 2 |
| 17 | NUT | Stainless Steel | 2 | 3 |
| 17B | NUT (LOW TYPE) | Stainless Steel | 0 | 1 |
| 18 | END CAP SCREW | Stainless Steel | 16 | 16 |
| 19* | CUP O-RING | Nitrile Rubber NBR | 2 | 2 |
| 21* | PISTON O-RING | Nitrile Rubber NBR | 2 | 2 |
| 22 | STEEL PINION WASHER | E.N.P. Carbon Steel | 1 | 1 |
| 23 | WASHER SCREW | Stainless Steel | 16 | 16 |
| 24 | FLANGE SCREW | Stainless Steel | 4 | 4 |
| 25 | FLANGE | Carbon Steel Coated | 1 | 1 |
| 26 | CILINDRIC PIN | Stainless Steel | 2 | 2 |
| 27 | INDICATOR or CAM | Polypropilene | 1 | 1 |
| 28 | EYE BOLT | Stainless Steel | 2 | 2 |
| 29* | O-RING | Nitrile Rubber NBR | 0 | 1 |
| 30 | END CUP PLUG | Aluminium | 0 | 1 |

* Suggested spare parts for maintenance included in spare parts kit

## Pneumatic Actuator AP12

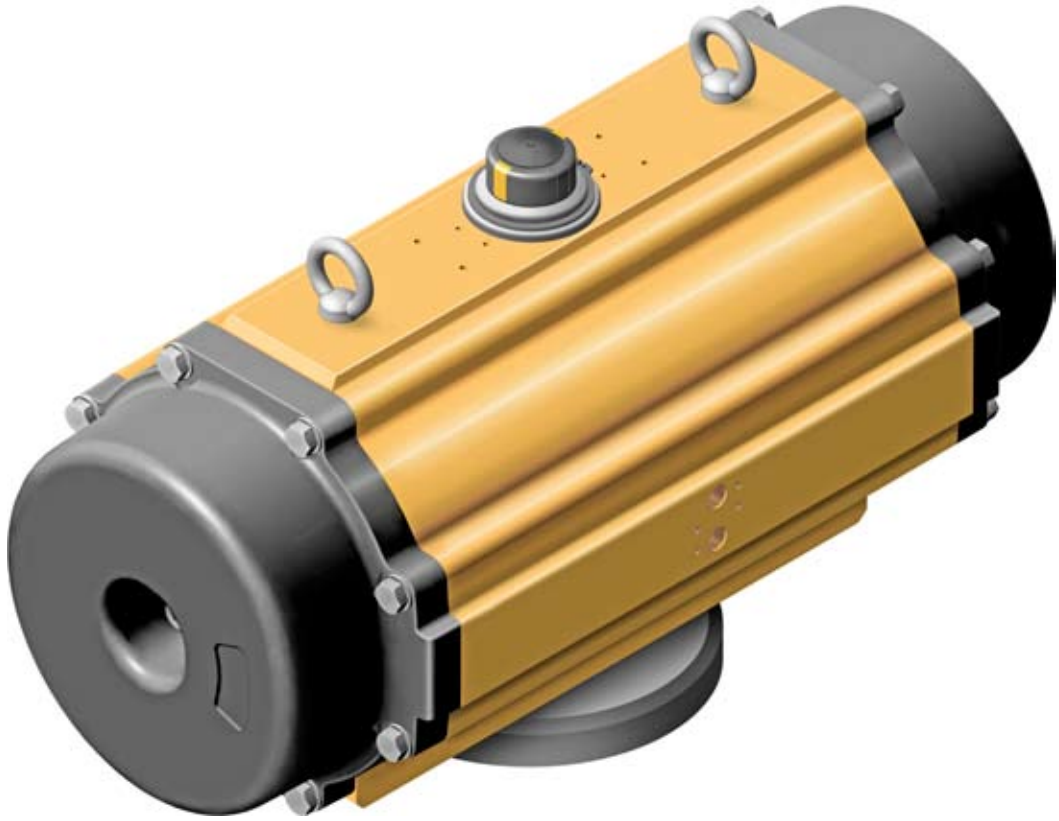

## Overall dimensions

ATTENTION:
Eyebolt must be used
ONLY to lift the actuator,
NOT to lift actuator+valve!

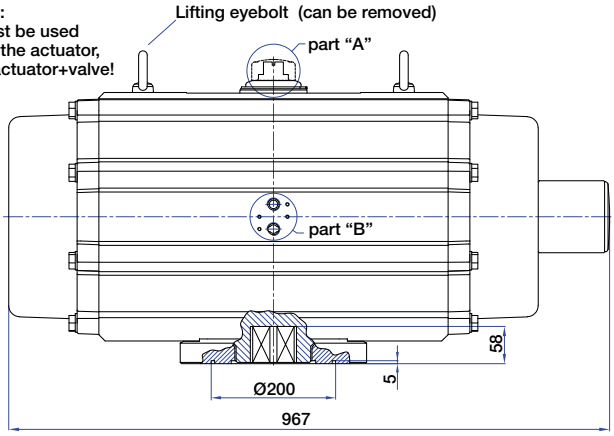


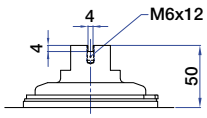


Part "A" scale 1: 2
Accessories connection
according to:
VDI/VDE 3845
UNI EN 15714-3

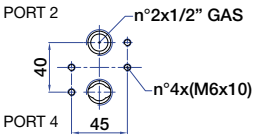


Part "B" scale 1: 2
Interface for directly
attached solenoid valve
according to:
VDI/VDE 3845
UNI EN 15714-3

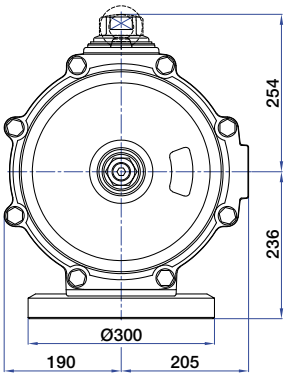


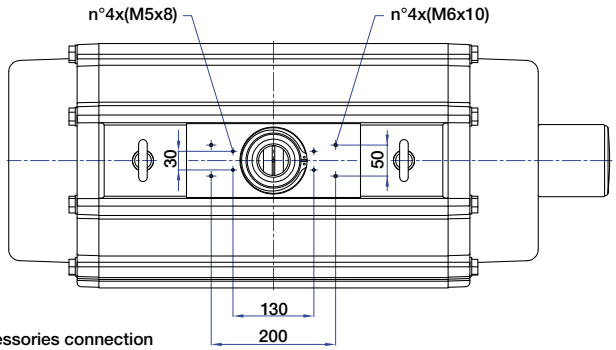


Flange accessories connection
according to:
VDI/VDE 3845
UNI EN 15714-3

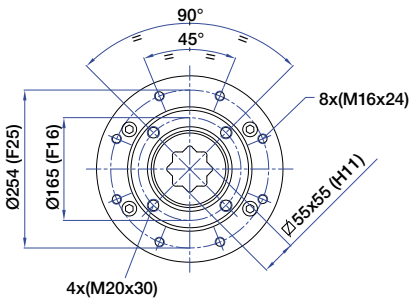


Flange connection
according to:
UNI EN ISO 5211

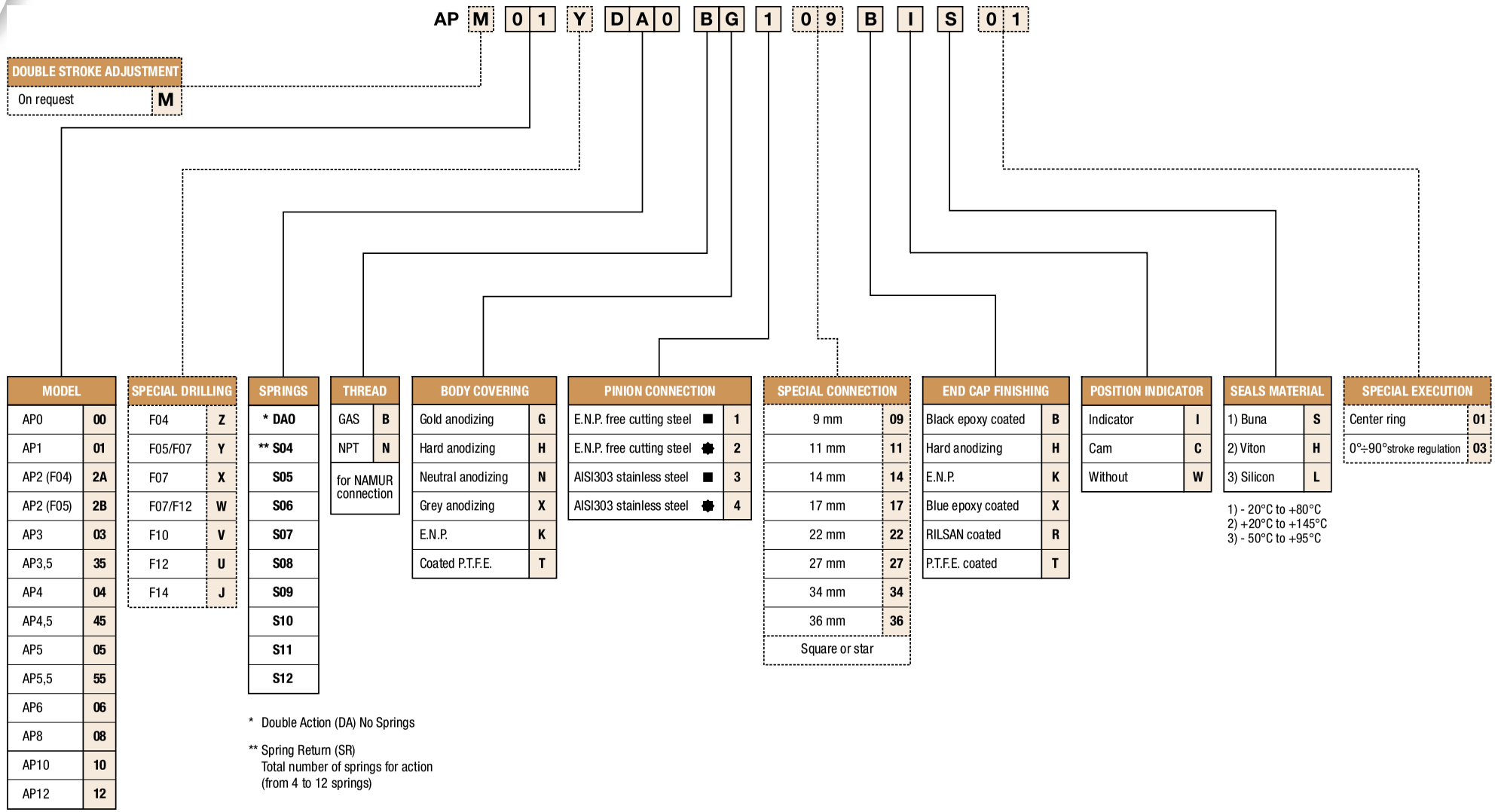


| DOUBLE STROKE ADJUSTMENT | |
|---|---|
| On request | M |

| MODEL | |
|---|---|
| AP0 | 00 |
| AP1 | 01 |
| AP2 (F04) | 2A |
| AP2 (F05) | 2B |
| AP3 | 03 |
| AP3,5 | 35 |
| AP4 | 04 |
| AP4,5 | 45 |
| AP5 | 05 |
| AP5,5 | 55 |
| AP6 | 06 |
| AP8 | 08 |
| AP10 | 10 |
| AP12 | 12 |

| SPECIAL DRILLING | |
|---|---|
| F04 | Z |
| F05/F07 | Y |
| F07 | X |
| F07/F12 | W |
| F10 | V |
| F12 | U |
| F14 | J |

| SPRINGS |
|---|
| * DAO |
| ** S04 |
| S05 |
| S06 |
| S07 |
| S08 |
| S09 |
| S10 |
| S11 |
| S12 |

* Double Action (DA) No Springs

** Spring Return (SR)
Total number of springs for action
(from 4 to 12 springs)

| THREAD | |
|---|---|
| GAS | B |
| NPT | N |
| for NAMUR connection | |

| BODY COVERING | |
|---|---|
| Gold anodizing | G |
| Hard anodizing | H |
| Neutral anodizing | N |
| Grey anodizing | X |
| E.N.P. | K |
| Coated P.T.F.E. | T |

| PINION CONNECTION | |
|---|---|
| E.N.P. free cutting steel ■ | 1 |
| E.N.P. free cutting steel ✹ | 2 |
| AISI303 stainless steel ■ | 3 |
| AISI303 stainless steel ✹ | 4 |

| SPECIAL CONNECTION | |
|---|---|
| 9 mm | 09 |
| 11 mm | 11 |
| 14 mm | 14 |
| 17 mm | 17 |
| 22 mm | 22 |
| 27 mm | 27 |
| 34 mm | 34 |
| 36 mm | 36 |
| Square or star | |

| END CAP FINISHING | |
|---|---|
| Black epoxy coated | B |
| Hard anodizing | H |
| E.N.P. | K |
| Blue epoxy coated | X |
| RILSAN coated | R |
| P.T.F.E. coated | T |

| POSITION INDICATOR | |
|---|---|
| Indicator | I |
| Cam | C |
| Without | W |

| SEALS MATERIAL | |
|---|---|
| 1) Buna | S |
| 2) Viton | H |
| 3) Silicon | L |

1) - 20°C to +80°C
2) +20°C to +145°C
3) - 50°C to +95°C

| SPECIAL EXECUTION | |
|---|---|
| Center ring | 01 |
| 0°÷90°stroke regulation | 03 |

## LIMIT SWITCH BOX



## PNEUMATIC POSITIONER



## ELECTRO-PNEUMATIC POSITIONER 4÷20 mA signal



## LIMIT SWITCH BOX + ELECTRO-PNEUMATIC POSITIONER 4÷20 mA signal



## SOLENOID VALVE



## DISANGEABLE GEAR BOX



CAT-AP/APM-01-12/18

SIRCA INTERNATIONAL S.P.A.

Via Trieste n° 8 - 20060 TREZZANO ROSA (MI - ITALY) - Phone ++39 02 92010204
Fax ++39 02 92010216 Purchase Dept. - Fax ++39 02 92011954 Sales Dept.
E-mail: info@sircainternational.com - web site: www.sircainternational.com