V25/2 TWO-WAY GLOBE CONTROL VALVES

INSTALLATION AND MAINTENANCE INSTRUCTIONS



ADCATrol

We reserve the right to change the design and material of this product without notice.

Produced in accordance with Sound Engineering Practices of the European PED - Pressure Equipment Directive.

IMI V252.015 E 00.21

GENERAL INFORMATION

- These instructions must be carefully read before performing any work involving VALSTEAM ADCA products. Failure to observe these instructions may result in hazardous situations.
- These instructions describe the entire life cycle of the product. Keep them in a location that is accessible to every user and make these instructions available to every new owner of the product.
- Current regional and plant safety regulations must be considered and followed during installation, operation, and maintenance work.
- The images shown in these instructions are for illustration purposes only.
- For the problems that cannot be solved with the help of these instructions, please contact VALSTEAM ADCA or its representative.

VALSTEAM ADCA ENGINEERING S.A

Zona Ind.da Guia
Pav.14 - Brejo
3105-467 Guia, Pombal
PORTUGAL
quality@valsteam.com

We reserve the right to change the design and material of this product without notice.

CONTENT

1. SAFETY INFORMATION 5
1.1. Explanation of symbols 5
1.2. Intended use 5
1.3. Qualification of personnel 6
1.4. Personal protective equipment 6
1.5. The system 6
1.6. ATEX 7
1.7. General safety notes 7

2. PRODUCT INFORMATION 9
2.1. Principle of operation 9
2.2. Certification 10
2.3. Product identification 10
2.4. Technical data 11

3. TRANSPORT, STORAGE AND PACKAGING 11

4. INSTALLATION 13
4.1. Preparation for installation 13
4.2. Installation procedure 14

5. START-UP 15
5.1. Preparation for start-up 15
5.2. Start-up procedure 15

6. OPERATION 16

7. SHUTDOWN 16
7.1. Shutdown procedure 16

8. PARTS LIST 17

9. MAINTENANCE 18
9.1. Maintenance procedure 18
9.2. Removing the valve bonnet 19
9.3. Replacing the V-ring stem seals (V) 19
9.4. Replacing the O-ring stem seals (EP) 19
9.5. Replacing the graphite stem seals (G) 20
9.6. Replacing the bellows stem seals (BV) 21
9.7. Replacing the bellows stem seals (BG) 22
9.8. Replacing the valve plug/steam assembly and seat 23
9.9. Refitting the valve bonnet 23
9.10. Tightening torques 24

10. TROUBLESHOOTING 25

11. DISPOSAL 26

12. RETURNING PRODUCTS 26

1. SAFETY INFORMATION

1.1. Explanation of symbols

DANGER

Hazardous situation which, if not avoided by applying the correct preventive measures, will result in fatal or serious injury and/or considerable damage to property.

WARNING

Hazardous situation which, if not avoided by applying the correct preventive measures, could result in fatal or serious injury and/or considerable damage to property.

CAUTION

Hazardous situation which, if not avoided by applying the correct preventive measures, could result in moderately severe or minor injury.

NOTICE

Situation which, if not avoided, can result in property damage or product malfunction.

NOTE

Indicates additional information, tips and recommendations.

1.2. Intended use

Refer to the markings on the device, such as nameplate and laser markings, Information Sheet (IS) and these Installation and Maintenance Instructions (IMI) to check that the product was designed for the intended use and meets the specifications used for sizing and selection. This includes checking application, material suitability, process medium, pressure and temperature as well as their respective limiting values.

VALSTEAM ADCA does not assume any responsibility for damage resulting from inappropriate use of the product, damage caused by external stresses or any other external factors. Correct installation of the product is the full responsibility of the contractor.

Inappropriate use of the product is any use other than the one described in this chapter. Inappropriate use also includes:

- Use of spare parts which are not genuine;
- Performance of maintenance work not described in these instructions;
- Use outside the limits defined by the accessories connected to the product.
- Unauthorized modifications to the product.

If the product is to be used for an application or with a fluid other than the one it was designed for, contact VALSTEAM ADCA.

1.3. Qualification of personnel

Handling, installation, operation and maintenance work must be carried out by fully trained and qualified personnel, capable of judging the work which they are assigned to perform and recognizing potentially hazardous situations. They should be trained to properly use this product according to these Installation and Maintenance Instructions.

Where a formal “Permits to Work” system is implemented in the plant it must be complied with.

1.4. Personal protective equipment

Personal protective equipment should always be worn during work in order to protect against hazards posed by e.g. the process medium, dangerous temperatures, noise, falling or projected objects, working at height. These equipment includes a helmet, safety glasses, safety harness, protective clothes, safety shoes, hearing protection, etc.

NOTE

Always assess whether you or others in your vicinity require any protective equipment. When in doubt check with the plant’s health & safety responsible personnel for details on required protective equipment.

1.5. The system

The complete system should be assessed as well as every action (e.g. closing of shut-off valves, disconnection of the power supply) to ensure this will not bring additional risk to personnel or property.

Dangerous actions that can result in a hazardous situation include isolation of protective devices such as safety valve, vents, vacuum relief valves, disconnection of electric safety devices, sensors and alarms.

1.6. ATEX

If the product is in the scope of the ATEX 2014/34/EU directive and as such bears the Ex marking, consult its specific Additional Instructions for use in Potentially Explosive Areas (IMI EX). In such cases, handling, installation, operation and maintenance work must only be performed by personnel qualified and authorized to work in potentially explosive areas.

1.7. General safety notes

DANGER

RISK OF BURSTING IN PRESSURE EQUIPMENT

Valves, ancillaries and pipelines are pressure equipment. Working above their operating limits or improper opening can lead to component bursting.

- Observe the maximum operating limits of the product and check if they are lower than those of the system in which it is being installed. Check the product Information Sheet (IS).
- Install a safety device.
- Before starting any work on the product, depressurize it and cool or heat it up to ambient temperature. This also applies to the line in which it is fitted.
- Drain the process medium from the product and all the relevant plant sections.

WARNING

RISK OF BURNS

Depending on the operating conditions, products and pipelines may get very hot or cold and cause burn injuries.

- Do not touch the product while it is hot or cold, allowing it firstly to cool down or heat up.
- Wear protective clothing and safety gloves during working operation.
- Thermally insulate tubes and product's as a preventive measure.

RISK OF INJURY CAUSED BY FLUID ATTACK ON PRODUCTS MATERIALS

The product must only be used with mediums that do not attack the materials of the product (body, gaskets, seals). Otherwise, leaks may occur, and hot and/or hazardous fluid can escape.

- Do not use the product with mediums other than the ones it was designed for. Check section 1.2 - Intended Use.
- Prevent medium contamination.

WARNING

RISK OF INJURY CAUSED BY UNDER TIGHTENED PRODUCT OR ITS COMPONENTS

Excessively low tightening torques may cause medium to escape or and/or components to be projected at high speed which may result in a hazardous situation depending on the medium, chemical properties and/or its operating conditions.

- Do not loosen any screw while the equipment is pressurized.
- Observe the specified tightening torques on these Installation and Maintenance Instructions. If the relevant torque value is not mentioned contact VALSTEAM ADCA.

RISK OF HEARING LOSS

Depending on the operating conditions, the product may generate loud noises.

- Wear hearing protection when in the vicinity of the product.

RISK OF INJURY AS A RESULT OF ILLEGIBLE INFORMATION

Important information written in the product nameplate, markings and warning signs may wear overtime or get illegible due to e.g. dirt accumulation, resulting in hazardous situations and personal injury or property damage.

- Keep nameplates, markings and warning signs in a legible state, replacing when illegible, missing or damaged.

CAUTION

RISK OF INJURY DUE TO RESIDUAL PROCESS MEDIUM

Direct contact with dangerous process medium may lead to personal injury, e.g. smoke inhalation and chemical burns.

- Drain the process medium from the product and all the relevant plant sections.
- Wear protective clothing, safety gloves, mask, and eye protection.

RISK OF INJURY DUE TO IMPROPER HANDLING

Manual handling (e.g. lifting, carrying, pushing, pulling) of large and/or heavy products may result in personal injury.

- Assess the risk associated with the handling task.
- Use adequate handling methods and appropriate auxiliary handling equipment.

NOTICE

RISK OF PRODUCT DAMAGE DUE TO EXCESSIVELY HIGH TIGHTENING TORQUES

High tightening torques may lead to premature wearing of product components.

- Observe the specified tightening torques on these Installation and Maintenance Instructions. If the relevant torque value is not mentioned contact VALSTEAM ADCA.

2. PRODUCT INFORMATION

The ADCATrol V25/2 is a series of single seated, two-way globe valves designed for process engineering and industrial applications, where events such as erosion, cavitation or flashing may occur.

These valves can be assembled with pneumatic, hydraulic or electric actuators, for modulating and shut-off control tasks.

2.1. Principle of operation

The process medium flows through the valve body (1) in the direction indicated by the arrow. A signal is sent to a linear actuator which is fitted to the bonnet shoulders (5) and attached to the valve stem (7). The valve stem (7) moves according to the actuator stroke direction, which in turn changes the position of the valve plug (3) in relation to the seat (2) and thus controls the flow which passes through the valve.

Body sealing is achieved through the gasket (8) and stem sealing is achieved through a packing set, which may defer depending on the process medium and its conditions.

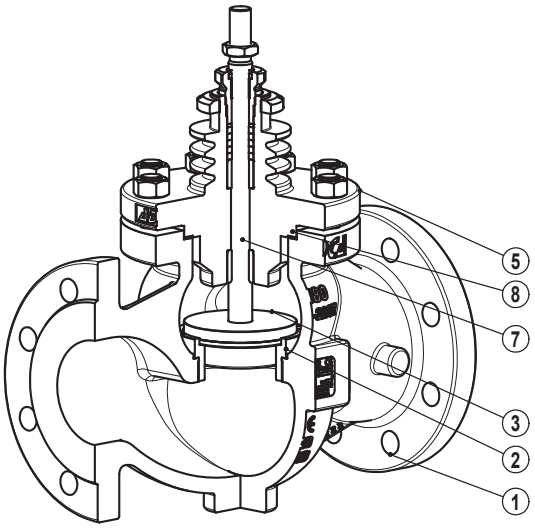

Fig. 1

2.2. Certification

This product has been specifically designed for use with liquids and gases which are in Group 2 of the European PED – 2014/68/EU Pressure Equipment Directive and it complies with its requirements.

CE MARKING – GROUP 2 (PED – European Directive)		
PN 16	**PN 40**	**Category**
DN 15 to 50	DN 15 to 32	SEP
DN 65 to 200	DN 40 to 100	1 (CE Marked)
	DN 125 to 200	2 (CE Marked)

CE MARKING – GROUP 2 (PED – European Directive)		
ASME 150	**ASME 300**	**Category**
1/2” to 2”	1/2” to 1”	SEP
3” to 6”	11/2” to 4”	1 (CE Marked)
-	6”	2 (CE Marked)

When the product is supplied with manual operation top or “bare stem” it is classified as a hand-operated valves and is thus not in the scope of the ATEX 2014/34/EU directive. Nonetheless, personnel responsible for the plant installation must assess the risks caused by static electricity and take the necessary precautionary measures to prevent static charge. These measures include e.g. connection of the product to the equipotential bonding system.

When the product is supplied with an actuator or alternatively “bare stem” but meant to be automated (e.g. with a pneumatic linear actuator), and intended to be used in a potentially explosive environment, contact VALSTEAM ADCA.

NOTE

If the product falls within category SEP it must not be CE marked, unless other directives are applicable.

2.3. Product identification

The following items are indicated on the product nameplate or directly on its body:

- Manufacturer
- Product model (e.g. V25/2)
- Pressure rating (e.g. PN40)
- Nominal size (e.g. DN40)
- Stem sealing (e.g. Pack.: V1.2)
- Flow rate coefficient (e.g. Kvs: 25 m3/h)

- Min. operating temperature (e.g. Tmin: -10ºC)
- Max. operating temperature (e.g. Tmax: 220ºC)
- Flow direction (indicated by an arrow)
- Serial number and year of manufacturing (e.g. Reg.:17483/19)
- Ordering code (e.g. Code: V22SS1U111EFH040)
- CE Marking (when applicable – see section 2.2 – Certification)
- EX Marking (when applicable e.g. EX h IIB T6…T3 Gb – see section 2.2 – Certification)

2.4. Technical data

For technical data including dimensions, materials, limiting conditions and versions refer to the product respective Information Sheet (IS).

3. TRANSPORT, STORAGE AND PACKAGING

WARNING

RISK DUE TO FALLING LOADS

Loads may tip or fall over resulting in demage to property, serious injury or death.

- Use suitable equipment when moving or lifting suspended loads.
- Make sure no one is standing below the suspended load.

CAUTION

RISK OF INJURY DUE TO IMPROPER HANDLING

Manual handling (e.g. lifting, carrying, pushing, pulling) of large and/or heavy products may result in personal injury such as back injury.

- Assess the risk associated with the handling task.
- Use adequate handling methods and appropriate auxiliary handling equipment.

NOTICE

RISK OF PRODUCT DAMAGE DUE TO IMPROPER STORAGE

- Do not remove any packaging or protective covers until immediately before installation at the site.
- Store the product in a solid base in a dry, cool and dust-free environment.
- Until its installation, protect it from the weather, dirt, corrosive atmospheres and other harmful influences.

NOTICE

RISK OF PRODUCT DAMAGE DUE TO LONG TERM STORAGE

Some product components may deteriorate with time (e.g. valve packings, seals).

- Do not store the product for more than 12 months.
- If for any reason the product must be stored for longer periods of time contact VALSTEAM ADCA.

Products are individually wrapped in plastic film, thermo shrinkable plastic and/or stored in a cardboard box as they leave VALSTEAM ADCA. Avoid removing packaging and any protective cover until immediately before installing the product at the site.

NOTE

If the transport packaging has any shipping damage contact VALSTEAM ADCA or its representative.

When lifting the valve assembly (valve body and actuator) attach slings around the valve body capable of withstanding the entire weight and use these to lift the assembly. Slings on the actuator should still be fitted to prevent it from tilting.

Use suitable lifting equipment such as a crane to lift the load.

NOTE

If the corrosion protection (paint and other surface coatings) of the product is damaged during transport or other handling procedures repair it immediately.

4. INSTALLATION

Before performing any installation work, refer to section 1 – Safety information.

WARNING

RISK OF INJURY DUE TO INSUFFICIENT SUPPORT DURING INSTALLATION

Insufficient support of the product during installation may cause it to fall and cause personal injury.

- Ensure the product is safely held in place during installation.
- Wear protective safety shoes.

NOTICE

RISK OF PRODUCT DAMAGE DUE TO STRESS

The product is not intended to withstand external stresses that may be inducted by the system to which it is being connected to.

- Make sure that the connected pipe does not subject the body to any stress (forces or torques) during installation and operation.
- Do not use the product as an elevation point.

4.1. Preparation for installation

Before installation, make sure the following conditions are met:

- The installation area has easy access and the device is to be installed in a position where operation and maintenance work can be performed safely.
- The product will be installed with proper support and free of any stresses that can be induced by the system due to e.g. pipe expansions. The necessary precautions are recommended during system design.
- The pipeline where the product will be installed is designed in such a way that it takes into account the weight of the product. The pipeline may require support on both sides next to the product, particularly if its size and weight are considerable and especially if vibrations are to be expected in the system.
- The product is not damaged.
- Make sure all the necessary materials and tools are readily available during installation work.
- Referring to this Installation and Maintenance Instructions (IMI), Information Sheet (IS) and nameplate, check that the product is suitable for the intended installation: temperature, medium, pressure, temperature, etc. – see section 1.2 – Intended use.

- Check that there are no foreign bodies inside the pipelines and ancillaries, flushing may be necessary. These should be thoroughly cleaned.
- Check any mounted pressure gauges and make sure they function properly.
- Consider good hydraulic flow control to avoid pressure surges and avoid dead legs on pipeline branches.
- A bypass line can be fitted to prevent system shutdown during maintenance procedures.
- Provide a straight section of pipeline with a minimum length of 2x nominal size of the pipeline upstream and 10x (20x in steam service) downstream of the valve.

NOTE

Assembly Drawings (AD) with assembly details and parts lists are available on request.

4.2. Installation procedure

1. Remove plastic film and other packaging, as well the protective covers which are placed on flanges or connection ends. Make sure the valve is free from foreign matter.
2. Valves which are to be fitted with ADCATrol actuators are generally delivered with the actuator already mounted. If delivered separately follow the actuator respective Installation and Maintenance Instruction (IMI) when mounting it onto the valve.
3. The recommended installation position of the valve is horizontal with the actuator pointing upwards.
4. The valve has an arrow or inlet/outlet designations, be sure that it is installed in the appropriate direction according to fluid flow.
5. Take care with jointing materials and sealing compounds to ensure that none may be permitted to block or enter the steam trap causing malfunction. In case of flanged connections use appropriate flange gaskets.

5. START-UP

Before performing the start-up procedure, refer to section 1 – Safety information.

The start-up procedure must be followed every time the product is put back into service.

5.1. Preparation for start-up

Before starting up, make sure the following conditions are met:

- All works on the system have been completed.
- All the necessary safety devices have been installed.
- When required, warning notices are used to alert others that the system is starting up.
- The product is correctly installed – see section 4 – Installation.
- Referring to these Installation and Maintenance Instructions (IMI), Information Sheet (IS) and nameplate, check that the product is suitable for the intended installation: temperature, medium, pressure, temperature, etc. – see section 1.2 – Intended use.
- A safety check was performed by qualified personnel. Checking for leaks, structural damage and integrity of system components.

NOTICE

RISK OF PRODUCT DAMAGE DUE TO CONTAMINATION

The presence of small particles in the medium (scale, weld splatters, etc.) may damage the product or cause malfunction.

- Flush pipelines before start-up.
- Clean protection varnishes from pipes and flanges, leftover paint, graphite, grease, etc.

5.2. Start-up procedure

1. Open shut-off valves slowly, until normal operating conditions are achieved.
2. Check for any leaks. In case the valve is fitted with graphite stem seals and develops leakage after a few hundred cycles, retighten the gland nut (12).
3. Check the product to ensure it is operating correctly.

6. OPERATION

Before operating the product refer to section 1 – Safety information.

Immediately after completing the start-up procedure, the product is ready for operation.

NOTE

Valves with graphite stem seals may require retightening of the gland nut (12) during their life time. When leak develops, immediately tighten the gland nut gradually until the leakage stops.
If the leakage can no longer be stopped by tightening the gland nut, replace the stem seals – see section 9.5 - Replacing the graphite stem seals (G).

NOTICE

DO NOT OVER TIGHTEN GRAPHITE STEM SEALS.

- An over tightened graphite packing set may produce higher friction and consequent reduced service life.
- Resulting higher friction forces may lead to the requirement of higher actuator thrusts in order to achieve the same permissible pressure drops.

7. SHUTDOWN

Before performing the shutdown procedure, refer to section 1 – Safety information.

7.1. Shutdown procedure

1. Switch off the system and secure it so it cannot be turned on by unauthorized personnel.
2. Fully close the upstream shut-off valve, to stop the process medium from flowing through the control valve.
3. Allow medium to cool down and completely drain it from the pipeline and valve.
4. Make sure the pipeline and control valve are not under pressure and are at a safe temperature.
5. Put the actuator out of operation, referring to its respective Installation and Maintenance Instructions (IMI).
6. Fully close the downstream shut-off valve.
7. If the valve is to be removed from the pipeline – see section 3 - Transport, storage and packaging.

8. PARTS LIST

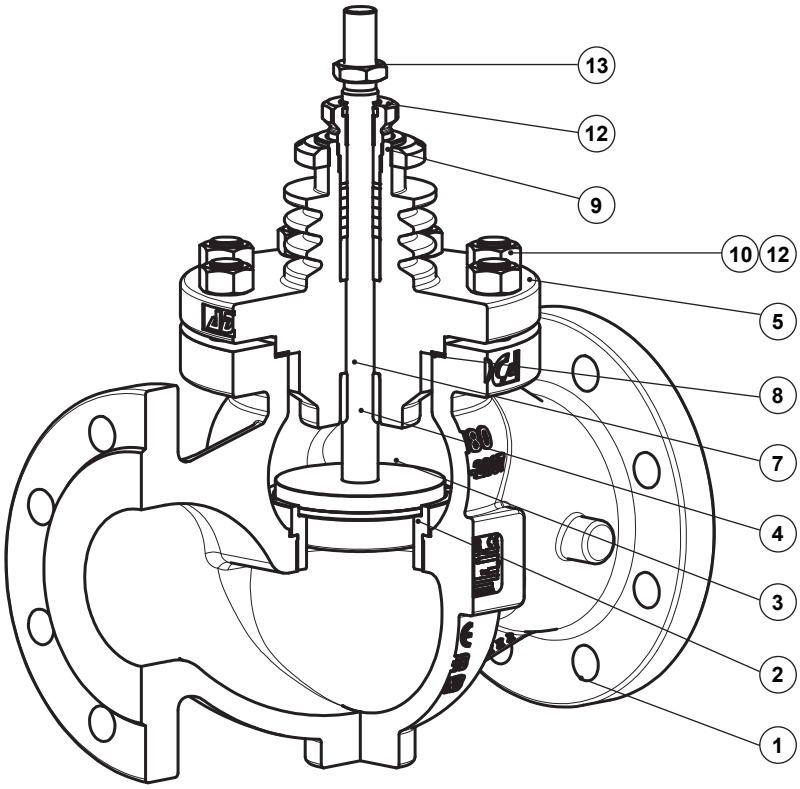

Fig. 2

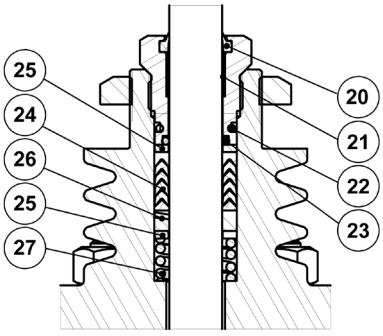

Fig. 3 - PTFE/GR V-Rings (V1.2)

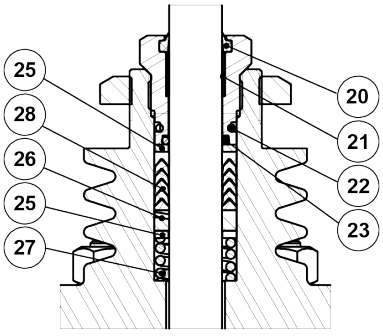

Fig. 4 - PTFE V-Rings (V2.2)

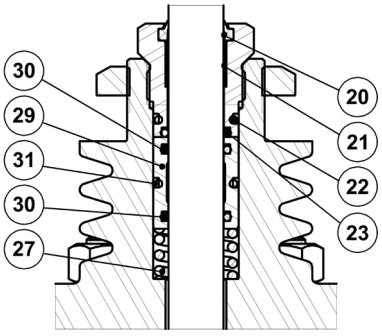

Fig. 5 - EPDM (EP1)

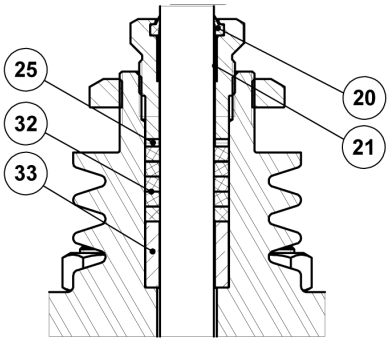

Fig. 6 - Graphite (G1)

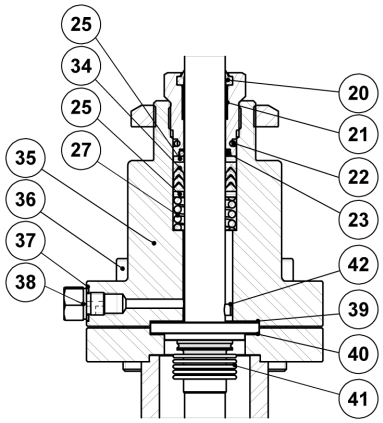

Fig. 7 - Bellows sealing (BV1)

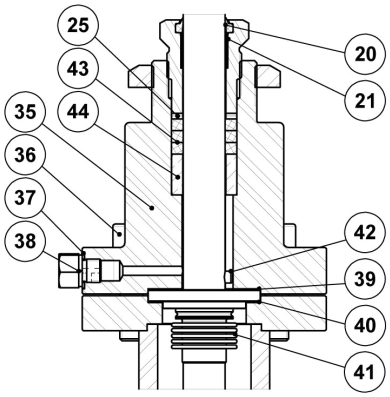

Fig. 8 - Bellows sealing (BG1)

POS. Nº	DESIGNATION	SPARE PARTS
1	Valve body	
2	Seat	X
3	Valve plug	X
4	Stem guide	
5	Bonnet	
7	Stem	X
8	Gasket	X
9	Lock nut	
10	Nuts	
11	Studs	
12	Packing nut	X
13	Lock nut	
20	Scraper ring	X
21	Plain bearing	X
22	O-ring	X
23	O-ring	X
24	Chevron packing set	X
25	Washer	
26	Stem guide	X
27	Spring	X

POS. Nº	DESIGNATION	SPARE PARTS
28	Chevron packing set	X
29	O-ring guide	
30	O-ring	X
31	O-ring	X
32	Packing set	X
33	Packing spacer	X
34	Safety packing set	X
35	Bellows bonnet	
36	Studs	
37	Gasket	
38	Compression fitting	
39	Gasket	X
40	Gasket	X
41	Metal bellows	X
42	Locking pin	X
43	Safety packing set	X
44	Packing spacer	
45	Nuts	
46	Bellows housing	

9. MAINTENANCE

Before performing a maintenance procedure, refer to section 1 – Safety information.

The product requires maintenance to ensure that it operates correctly and safely throughout its lifetime. Maintenance work should be performed in a planned manner at periodic intervals. These intervals must be defined by the operator according to the service conditions.

9.1. Maintenance procedure

1. Make sure all necessary materials and tools are readily available during maintenance work.
2. Perform the shutdown procedure – see section 7 – Shutdown.
3. Remove the actuator from the valve referring to its respective Installation and Maintenance Instructions (IMI).
4. Perform the maintenance procedure – see the following sections.
5. Mount the actuator onto the valve referring to its respective Installation and Maintenance Instructions (IMI).
6. Put the valve back into operation – see section 5 – Start-up.

9.2. Removing the valve bonnet

1. Undo the body nuts (10) gradually in a crisscross pattern and separate the bonnet (5) from the valve body (1).
2. Remove the body gasket (8) and clean surfaces thoroughly, leaving no remaining graphite leftovers.

9.3. Replacing the V-ring stem seals (V)

1. Unscrew the lock nut (13) from the stem (7).
2. Unscrew the gland nut (12) and remove it carefully together with the O-rings (22, 23).
3. Carefully pull the plug (3) with plug stem (7) out of the bonnet (5) through its bottom. Inspect the stem surface and plug sealing surface, replacing if necessary.
4. Pull out all stem sealing components (24, 25, 26, 27) from the packing box using a suitable tool.
5. Clean the packing box and slide the stem (7) into the bonnet (5) once again.
6. Apply a suitable lubricant to all steam sealing components and stem (7).
7. Carefully slide the stem sealing components into the packing box according to Fig. 9.
8. Renew the scraper ring (20), plain bearing (21) and O-rings (22, 23) if necessary. Fit the O-rings (22, 23) and the gland nut (21), screwing it loosely.

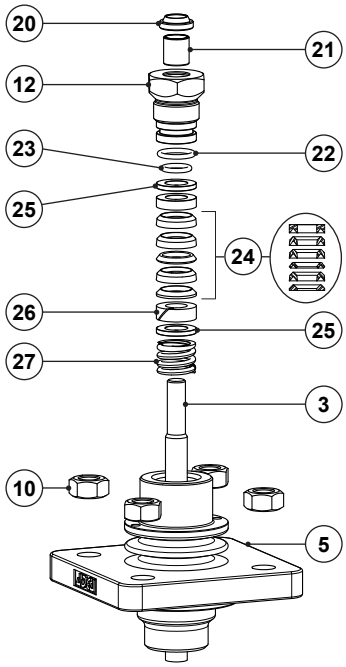

Fig. 9 - PTFE V-Rings

9.4. Replacing the O-ring stem seals (EP)

1. Unscrew the lock nut (13) from the stem (7).
2. Unscrew the gland nut (12) and remove it carefully together with the O-rings (22, 23).
3. Carefully pull the plug (3) with plug stem (7) out of the bonnet (5) through its bottom. Inspect the stem surface and plug sealing surface, replacing if necessary.
4. Pull out the O-ring guide (29) and spring (27) from the packing box using a suitable tool.
5. Clean the packing box and slide the stem (7) into the bonnet (5) once again.
6. Remove the O-rings (30, 31) from the O-ring guide (29) with a suitable tool and replace them.
7. Apply a suitable lubricant on the O-rings (30, 31).

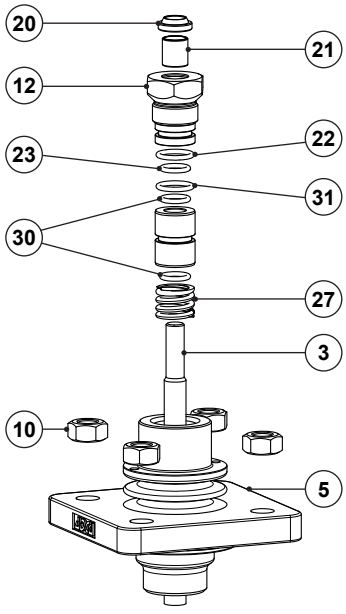

Fig. 10 - EPDM (EP1)

8. Insert the spring (27) on the packing box and carefully slide in the O-ring guide (29) according to Fig. 10.
9. Renew the scraper ring (20), plain bearing (21) and O-rings (22, 23) if necessary. Fit the O-rings (22, 23) and the gland nut (21), screwing it loosely.

9.5. Replacing the graphite stem seals (G)

1. Unscrew the lock nut (13) from the stem (7).
2. Unscrew the gland nut (12) and remove it carefully.
3. Carefully pull the plug (3) with plug stem (7) out of the bonnet (5) through its bottom. Inspect the stem surface and plug sealing surface, replacing if necessary.
4. Pull out the washer (25), graphite packing set (32) and spacer (33) using a suitable tool.
5. Clean the packing box and slide the stem (7) into the bonnet (5) once again.
6. Insert the spacer (33), and the new graphite packing set (32) rings one by one. When fitting the graphite rings ensure the scarf joints have an offset from the one below by 90º. See Fig. 11.
7. Renew the scraper ring (20) and plain bearing (21) if necessary.

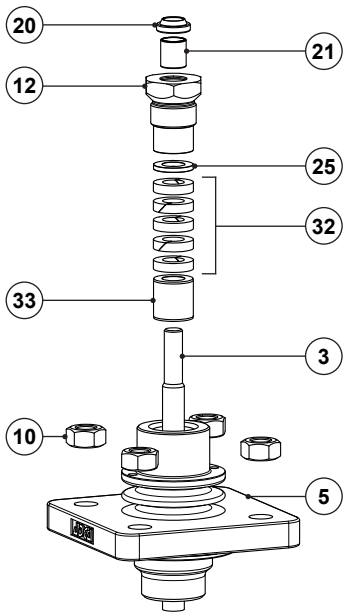

Fig. 11 - Graphite (G1)

8. Fit the washer (25), apply a slight smear of anti-seize lubricant to the gland nut (21) and screw it loosely with your fingers until resistance can be felt. The packing must not be significantly compressed at this stage.

9.6. Replacing the bellows stem seals (BV)

1. Undo the nuts (45) gradually in a crisscross pattern and separate the bellows bonnet (35) from the bellows housing (46).
2. Unscrew the gland nut (12) and remove it carefully together with the O-rings (22, 23).
3. Pull out all stem sealing components (34, 25, 27) from the packing box using a suitable tool and clean the packing box.
4. Apply a suitable lubricant to all steam sealing components and carefully slide them into the packing box according to Fig. 12.
5. Renew the scraper ring (20), plain bearing (21) and O-rings (22, 23) if necessary. Fit the O-rings (22, 23) and the gland nut (21), screwing it loosely.
6. Undo the nuts (10) gradually in a crisscross pattern and separate the bellows housing (46) from the valve body (1).
7. Firmly fix the valve plug (3) on a vise, fit a wrench on the two slits close to the locking pin (42) and unscrew the plug (3) from the stem (7).
8. Remove the valve stem (7) with the bellows (41) from the bellows housing (46).
9. Remove the gaskets (39, 40) and clean surfaces thoroughly, leaving no remaining graphite leftovers.
10. Fix the new valve plug (3) on a vise with the thread facing up. The vise jaws should be griping the plug section with the largest diameter.
11. Fit a new gasket (39) and insert the new bellows (41) on the bellows housing (46).
12. Apply a suitable high temperature adhesive compound on the lower stem (7) thread and screw it onto the seat, tightening with 50 Nm (DN 15 to 50 – ½" to 2"), 120 Nm (DN 65 to 150 – 21/2" to 6") and 230 Nm (DN 200 – 8").
13. Insert the pin (42) onto the stem (7) and fit a new gasket (39).

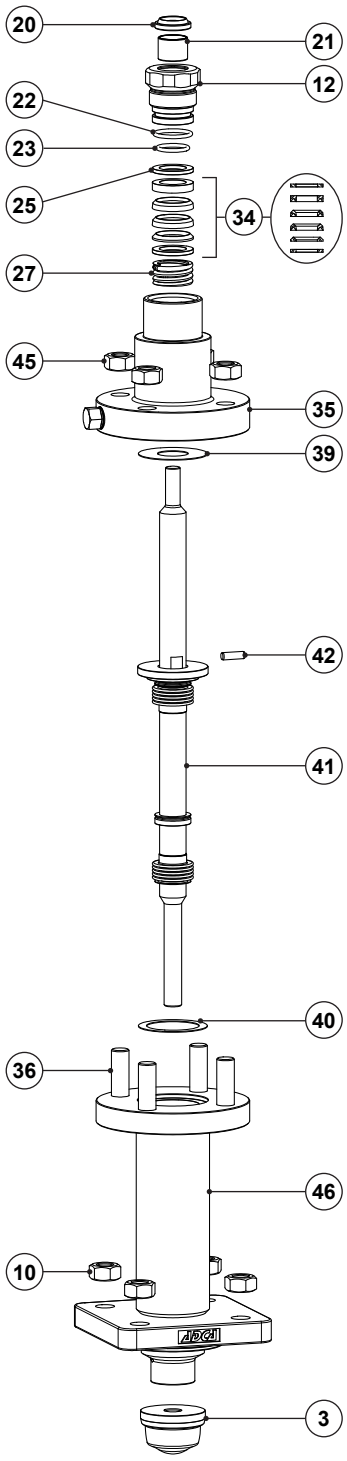

Fig. 12 - Bellows sealing (BV1)

14. Align the center of the bellows bonnet (35) with the stem (7), sliding it carefully while aligning the pin (42) with the slit.
15. Ensure everything is well centered and tighten the nuts (45) in a crisscross pattern until a torque of 50 Nm is achieved.

9.7. Replacing the bellows stem seals (BG)

1. Undo the nuts (45) gradually in a crisscross pattern and separate the bellows bonnet (35) from the bellows housing (46).
2. Unscrew the gland nut (12) and remove it carefully together with the O-rings (22, 23).
3. Pull out the washer (25), graphite packing set (43) and spacer (44) using a suitable tool.
4. Clean the packing box, insert the spacer (44), and the new graphite packing set (43) rings one by one. When fitting the graphite rings ensure the scarf joints have an offset from the one below by 90º. See Fig. 13.
5. Renew the scraper ring (20) and plain bearing (21) if necessary.
6. Fit the washer (25), apply a slight smear of anti-seize lubricant to the gland nut (21) and screw it loosely with your fingers until resistance can be felt. The packing must not be significantly compressed at this stage.
7. Undo the nuts (10) gradually in a crisscross pattern and separate the bellows housing (46) from the valve body (1).
8. Firmly fix the valve plug (3) on a vise, fit a wrench on the two slits close to the locking pin (42) and unscrew the plug (3) from the stem (7).
9. Remove the valve stem (7) with the bellows (41) from the bellows housing (46).
10. Remove the gaskets (39, 40) and clean surfaces thoroughly, leaving no remaining graphite leftovers.
11. Fix the new valve plug (3) on a vise with the thread facing up. The vise jaws should be griping the plug section with the largest diameter.
12. Fit a new gasket (39) and insert the new bellows (41) on the bellows housing (46).
13. Apply a suitable high temperature adhesive compound on the lower stem (7) thread and screw it onto the seat, tightening with 50 Nm (DN 15 to 50 – ½" to 2"), 120 Nm (DN 65 to 150 – 21/2" to 6") and 230 Nm (DN 200 – 8'').
14. Insert the pin (42) onto the stem (7) and fit a new gasket (39).
15. Align the center of the bellows bonnet (35) with the stem (7), sliding it carefully while aligning the pin (42) with the slit.
16. Ensure everything is well centered and tighten the nuts (45) in a crisscross pattern

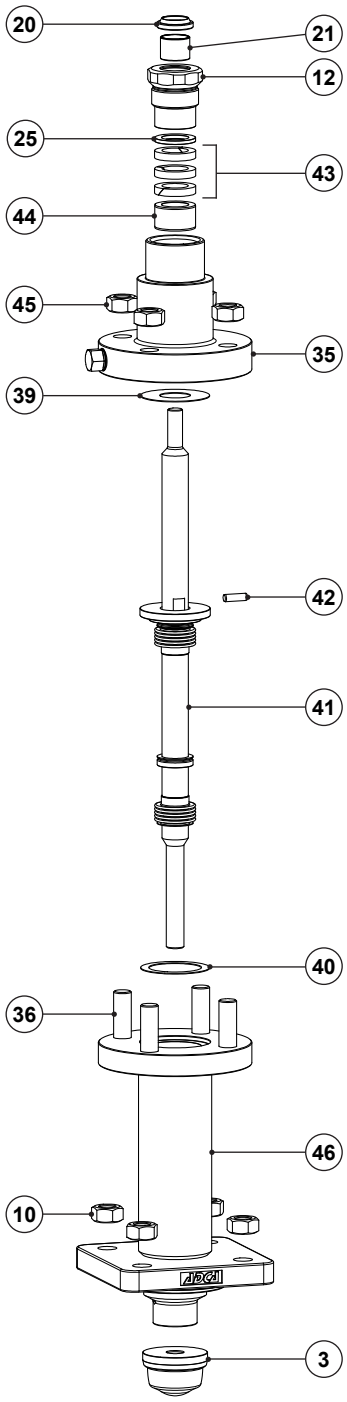

Fig. 13 - Bellows sealing (BG1)

until a torque of 50 Nm is achieved.

9.8. Replacing the valve plug/steam assembly and seat

NOTE

When replacing the plug/stem assembly it is recommended to replace the stem seals. See previous sections.

1. Unscrew the lock nut (13) from the stem (7).
2. Slacken the gland nut (12) by about 2-3 turns.
3. Carefully pull the plug (3) with plug stem (7) out of the bonnet (5) through its bottom.
4. Unscrew the seat (2) using a suitable tool, which can be obtained from the manufacturer.
5. Clean the thread thoroughly, removing all signs of leftover silicone.
6. Apply a suitable silicone sealant to the thread of the new seat.
7. Tighten the seat onto the valve body with the recommended torque – see section 9.10 – Tightening torques.

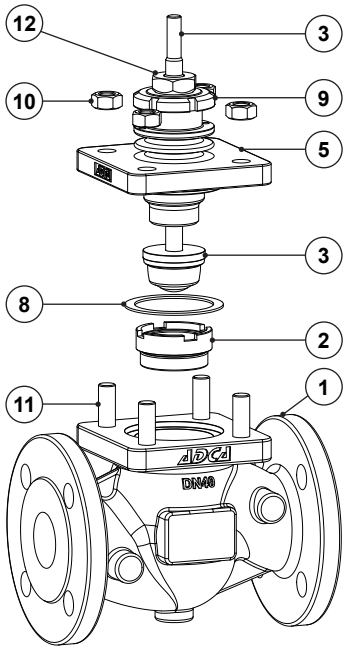

Fig. 14

9.9. Refitting the valve bonnet

1. Remove the body gasket (8) and clean surfaces thoroughly, leaving no remaining graphite leftovers.
2. Place the bonnet (5) on the valve body.
3. Firmly press the valve plug (3) against the seat (2) while tightening the body nuts (10) in a crisscross pattern by hand. Raise the plug until the valve reaches full stroke position and firmly push the plug fully downwards.
4. Proceed by tighten the nuts in four stages with incremental torques (30%, 60%, 80% and 100%) finally achieving the recommended torques – see section 9.10 – Tightening torques. Between each stage raise the plug until the valve reaches full stroke position and firmly push the plug fully downwards.
5. If V-ring or O-ring stem seals are fitted, tighten the gland nut (12) until metal to metal contact is achieved, torquing to 20 Nm.

6. If graphite stem seals are fitted, tighten the gland nut (12) with a torque of 30-50 Nm. Stroke the valve manually a couple of times and verify that the friction is not excessive.

NOTICE

DO NOT OVER TIGHTEN GRAPHITE STEM SEALS

- An over tightened graphite packing set may produce higher friction and consequent reduced service life.
- Resulting higher friction forces may lead to the requirement of higher actuator thrusts in order to achieve the same permissible pressure drops.

9.10. Tightening torques

SIZE		SEAT (2)		ACTUATOR LOCK NUT (9)		NUTS (10)	
EN	ASME	Thread size	Torque (Nm)	Thread size	Torque (Nm)	Nº of bolts x Thread size	Torque (Nm)
DN 15	1/2"	M32 x 1,5	250	M40 x 1,5	100	4 x M12	50
DN 20	3/4"	M32 x 1,5	250	M40 x 1,5	100	4 x M12	50
DN 25	1”	M32 x 1,5	250	M40 x 1,5	100	4 x M12	50
DN 32	11/4”	M40 x 1,5	350	M40 x 1,5	100	4 x M12	50
DN 40	11/2”	M48 x 1,5	400	M40 x 1,5	100	4 x M12	50
DN 50	2”	M60 x 1,5	500	M40 x 1,5	100	4 x M12	50
DN 65	21/2”	M76 x 1,5	780	M45 x 1,5	120	6 x M16	120
DN 80	3”	M90 x 1,5	900	M45 x 1,5	120	8 x M16	120
DN 100	4”	M110 x 1,5	1250	M45 x 1,5	120	8 x M16	120
DN 125	5”	M150 x 1,5	1750	M65 x 2	180	8 x M20	230
DN 150	6”	M175 x 2	3000	M65 x 2	180	8 x M24	300
DN 200	8”	M225 x 3	4500	M80 x 2	250	12 x M20	280

10. TROUBLESHOOTING

Before applying any corrective measure, refer to section 1 – Safety information.

If the malfunction cannot be solved with the help of the following table, contact VALSTEAM ADCA or its representative.

Malfunction	Possible cause	Corrective measure
The valve leaks to the atmosphere.	The stem sealing or body sealing is defective.	• Replace stem seals and body gasket. • In case of graphite stem seals (G1) or bellows sealing (BG1), check if the gland nut (12) is undertightened. If so, retighten slightly. Make sure the stem can still move and friction is not excessive.
	Relaxation or undertorque of the bonnet studs and nuts.	• Check the bonnet bolting torque. Refer to section 9.10 – Tightening torques.
	Leaking body due to corrosion or high velocity related damage.	• Contact VALSTEAM ADCA or its representative.
Excessive valve seat leakage.	Damaged or worn sealing surface on valve plug and/or seat.	• Replace plug and seat - see section 9.9 - Replacing the valve plug/stem assembly and seat.
	Dirt or foreign particles inside the valve, particularly between seat and plug.	• Flush the valve by opening the valve quickly several times. • Open the valve and clean the valve trim fully.
	Pneumatic actuator is not venting completely.	• Check pneumatic instrumentation, e.g., solenoid valve leakage. • Check if the vent plug is clogged.
	Actuator is not working satisfactorily.	• Inspect the actuator, refer to its specific Installation and Maintenance Instructions (IMI) if necessary.
	Actuator is not powerful enough.	• Check service conditions and actuator sizing. • In case of graphite stem seals (G1) or bellows sealing (BG1), check if the gland nut (12) is overtightened. • Contact VALSTEAM ADCA or its representative.
Jerky stem movement.	Stem is seizing due to dirt deposits or foreign particles.	• Open the valve and clean the valve trim fully. Replace necessary components and resolve the source of the issue.
	Actuator is not powerful enough.	• Check service conditions and actuator sizing. • In case of graphite stem seals (G1) or bellows sealing (BG1), check if the gland nut (12) is overtightened. • Contact VALSTEAM ADCA or its representative.

11. DISPOSAL

Once the product has reached the end of its working life, it should be sent for disposal in accordance with the prevailing national and local regulations.

Before disposal make sure that the product is clean and free from fluid residues.

During its disposal, pay special attention to rubbers, resins and polymer components (PVC, PTFE, PP, PVDF, FKM, NBR, etc.).

Do not dispose of components and hazardous substances together with household waste.

12. RETURNING PRODUCTS

Information regarding hazards and precautionary measures to be considered due to contaminating fluids and residues or mechanical damage that may represent a health, safety or environmental risk, must be provided in writing when returning products to VALSTEAM ADCA.

WARNING

RISK DUE TO PRESENCE OF HAZARDOUS RESIDUES ON RETURNED PRODUTS

Contaminated fluids and residues may represent an environmental risk, or risk to VALSTEAM ADCA personnel.

- Information regarding any hazards or precautionary measures to be considered must be provided in writing when returning products to VALSTEAM ADCA.
- Health and Safety information sheets relating to any substances identified as hazardous or potentially hazardous must be provided outside the packaging.
- Use Hazmat labels on the packaging.

IMPORTANTE NOTE

Total or partial disregard of these Installation and Maintenance Instructions involves loss of any right to warranty.

The extent and warranty period are specified in the “General sales conditions”.