ASCO™ Solenoid Valves

For Cryogenic Service

Direct Operated, 1/8, 1/4 and 3/8 Tapped

2/2 NC
Series
262-263

Features

- *The solenoid valves will withstand the severe service encountered in controlling cryogenic fluids, such as liquid oxygen (-183°C), liquid argon (-186°C) and liquid nitrogen (-196°C)*
- *All valves are degreased, cleaned, tested and packed to keep them free from moisture. In addition liquid oxygen (LOX) valves are "black light" tested to check for any hydrocarbons*
- *Valves do not require a minimum operating pressure*
- *Compliance with UL and CSA standards*
- *The solenoid valves satisfy all relevant EU directives*

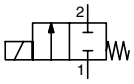



General

Differential pressure See «SPECIFICATIONS» [1 bar =100 kPa]
Maximum viscosity 65 cSt (mm^2/s)
Response time 5 - 25 ms

fluids (✳)	temperature range (TS)	seal materials (✳)
cryogenic fluids	-196°C to +60°C	PTFE

Materials in contact with fluid

(✳) Ensure that the compatibility of the fluids in contact with the materials is verified

Body Brass
Shading coil Copper
Core tube Stainless steel, AISI 305
Core and plugnut Stainless steel, AISI 430F
Springs Stainless steel, AISI 302
Seal Lead-clad copper
Disc PTFE

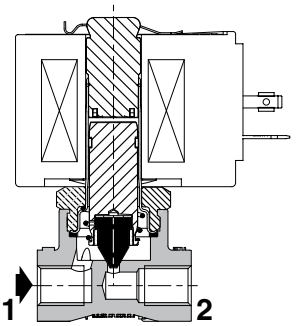

NC function (263 - 1/8)

Electrical characteristics

Coil insulation class F (AC) or H (DC)
Connector Spade plug (cable Ø 6-10 mm)
Connector specification ISO 4400 / EN 175301-803, form A
Electrical safety IEC 335
Electrical enclosure protection Moulded IP65 (EN 60529)
Standard voltages DC (=) : 24V - 48V
(Other voltages and 60 Hz on request) AC (~) : 24V - 48V - 115V - 230V/50 Hz

operator ambient temperature range (TS)	power ratings				replacement coil (1)	
	inrush ~	holding ~		hot/cold =	~	=
(°C)	(VA)	(VA)	(W)	(W)	230 V/50 Hz	24 V DC
-40 to +55	50	25	10,1	8,5/11,6	238613-059	238913-006
	70	40	17,1	15,1/22,6	238613-159	238913-106

(1) All 238 basic numbers are UL & CSA approved and marked with the UR (recognised component) & CSA logos.

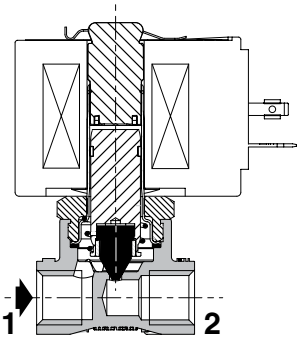

NC function (262 - 1/4)

Options

•Seals and disc (✳) (2) (fluid temperature range) PTFE: -196°C to +66°C (coil class F / AC Voltage)
-196°C to +49°C (coil class H / DC Voltage)

•Connector with visual indication and peak voltage suppression or with cable length of 2 m

(✳) Ensure that the compatibility of the fluids in contact with the materials is verified.

(2) The minimum ambient temperature of the solenoid valve is determined by the limitations of minimum temperature indicated.

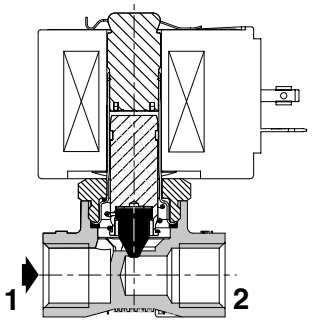

NC function (263 - 3/8)

01473GB-2023/R01
Availability, design and specifications are subject to change without notice. All rights reserved.

Specifications

pipe size	orifice size	flow coefficient Kv		operating pressure differential (bar) min.	operating pressure differential (bar) max. (PS) cryogenic fluids (✳) ~	operating pressure differential (bar) max. (PS) cryogenic fluids (✳) =	power coil (W) ~	power coil (W) =	thread type	dimensions / type (1)	brass	voltage code 24 V/50 Hz	48 V/50 Hz	115 V/50 Hz	230 V/50 Hz	24 V/DC	48 V/DC
	(mm)	(m³/h)	(l/min)														
Without manual operator																	
NC - Normally closed																	
1/8	3,2	0,3	5	0	11	4.5	10,1	11,6	G	01	**G263K240S1TD0**						
1/4	3,2	0,3	5	0	11	4.5	10,1	11,6	G*	01	**E262K232S1TD0**						
	5,6	0,63	10,5	0	7	3	17,1	22,6	G*	01	**E262K114S1TD0**						
	7,1	0,76	12,7	0	4	1.2	17,1	22,6	G*	01	**E262K212S1TD0**	**FL**	**FR**	**FT**	**F8**	**H1**	**H9**
3/8	3,2	0,3	5	0	11	4.5	10,1	11,6	G*	02	**E263K232S1TD0**						
	5,6	0,63	10,5	0	6	3	17,1	22,6	G*	02	**E263K206S1TD0**						
	7,1	0,76	12,7	0	4	1.2	17,1	22,6	G*	02	**E263K210S1TD0**						

(1) For dimensions, see drawing(s) for each construction type on the following page(s).

(✳) Ensure that the compatibility of the fluids in contact with the materials is verified.

15-DIGIT PRODUCT CODE

Configurator - CAD Files

- **---** **K** **---** **S1** **TD0** **--**

Thread connection
G = ISO 228/1 (1/8)
E = ISO 228/1 & ISO 7/1 (combination thread, G*)
8 = NPT (SAE 71051) [contact us]

Product series
262 (1/4)
263 (1/8 - 3/8)

Revision letter
K = Initial release

Valves version

Voltage - class
FL = 24 V / 50 Hz - class F
FR = 48 V / 50 Hz - class F
FT = 115 V / 50 Hz - class F
F8 = 230 V / 50 Hz - class F
H1 = 24 V DC - class H
H9 = 48 V DC - class H

Options
Without manual operator
TD0 = PTFE disc and seals

Electrical interface
S1 = With spade plug connector

		Spare parts kits no. (✳) AC (~)	PTFE	DC (=)	PTFE
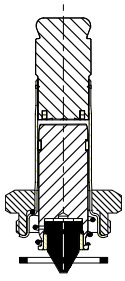	G263K240 E262K232 E262K114 E262K212 E263K232 E263K206 E263K210	**M200056**	**TD0**	**M200057**	**TD0**

01473GB-2023/R01
Availability, design and specifications are subject to change without notice. All rights reserved.

		Accessories code
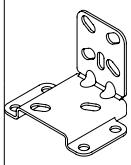	Mounting bracket Steel version (AISI 1010 / 1.1121)	**M200094A00**
	Mounting bracket Stainless steel version (AISI 304 / 1.4301)	**M200095A00**

Installation

- The solenoid valves can be mounted in any position without affecting operation
- Solenoid valves have 2 mounting holes in body
- Thread connection “E” applicable for 1/4, 3/8 have standard thread according to ISO 228/1 and ISO 7/1. Thread connection “G” applicable for 1/8, have standard thread according to ISO 228/1
- Thread connection “8” have standard thread = NPT (SAE 71051)
- Installation/maintenance instructions are included with each valve

Dimensions (mm), **Weight** (kg)

Configurator - CAD Files



TYPE 01
Electrical interface “S1”
Epoxy moulded
IEC 335 / ISO 4400
IP65

1/8 power coil 10,1 W / 11,6 W

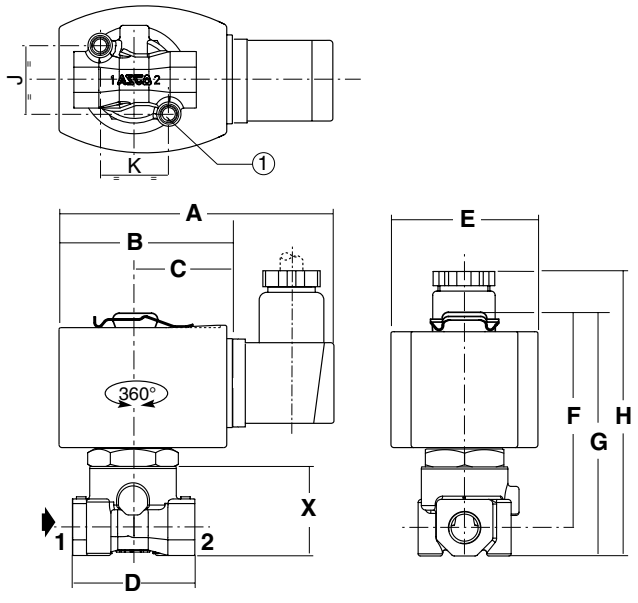

1/4 power coil 10,1 W / 11,6 W - 17,1 W / 22,6 W

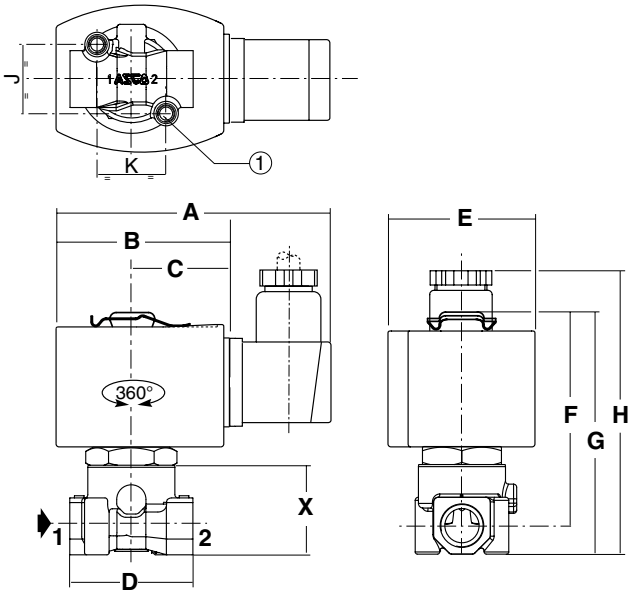

type	pipe size	A	B	C	D	E	F	G	H	X	weight (1)
01	1/8	95	57	33	40	50	69	78	93	29	0,54
	1/4	95	57	33	40	50	69	78	93	29	0,58

(1) Incl. coil(s) and connector(s).

(1) 2 mounting holes:
M5 dia., depth 7,5 mm (1/8-1/4)

01473GB-2023/R01
Availability, design and specifications are subject to change without notice. All rights reserved.

Dimensions (mm), **Weight** (kg)

Configurator - CAD Files



TYPE 02
Electrical interface “S1”
Epoxy moulded
IEC 335 / ISO 4400
IP65

3/8 power coil 10,1 W / 11,6 W - 17,1 W / 22,6 W

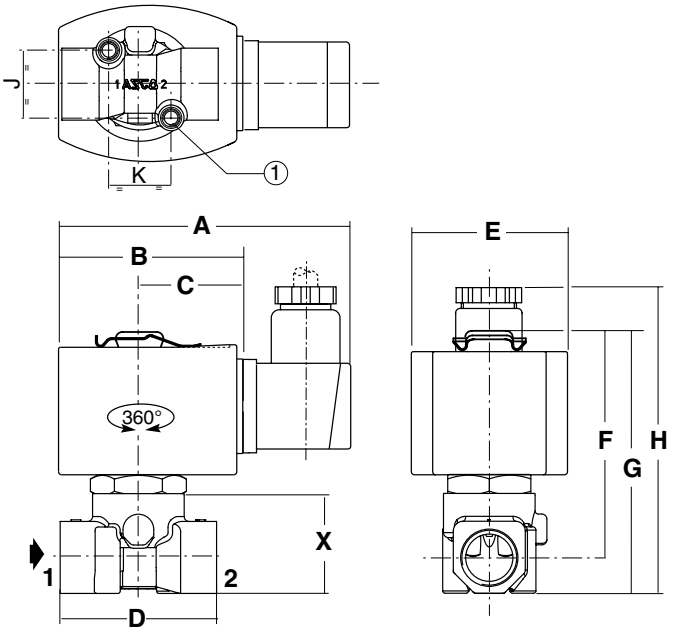

type	pipe size	A	B	C	D	E	F	G	H	X	weight (1)
02	3/8	95	59	34	48	50	69	80	95	31	0,61

(1) Incl. coil(s) and connector(s).

(1) 2 mounting holes:
M5 dia., depth 6 mm (3/8)

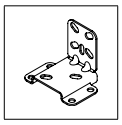

Mounting bracket
Steel or stainless steel

M200094A00 / M200095A00

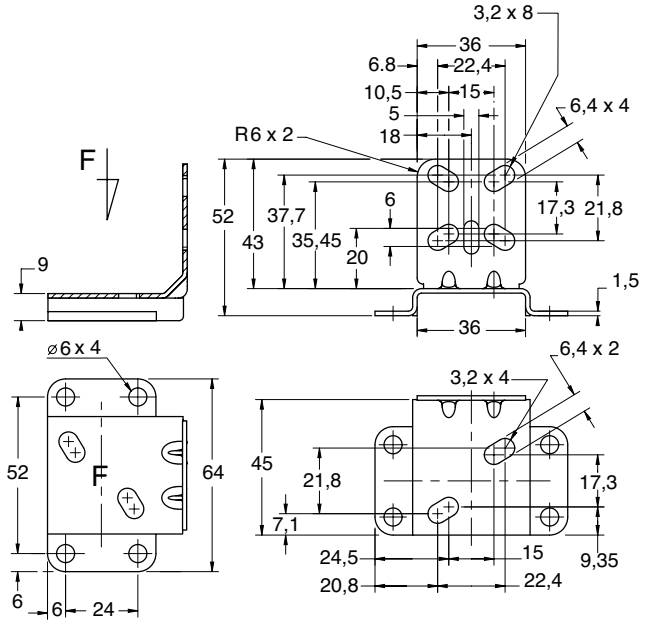

01473GB-2023/R01
Availability, design and specifications are subject to change without notice. All rights reserved.