INTELLIGENT LINEAR ELECTRIC ACTUATORS
ELS
(2,3 kN to 25 kN)

DESCRIPTION

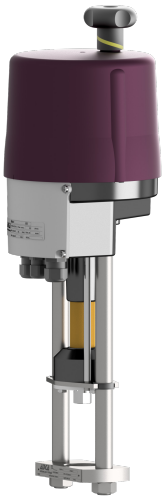

The ADCATrol ELS series intelligent linear electric actuators are designed for operation of control valves in modulating and on/off services in process engineering and industrial applications. The actuator is equiped as standard with positioner and active feedback function, automatic commissioning as well as comprehensive diagnostic functions.
The ELS is optionally available with super capacitors for fail-safe operation, returning to its respective fail-safe position in case of power failure/interruption.

MAIN FEATURES

Modular retrofittable design.
Automatic comissioning with the press of one button.
115 V AC, 230 V AC 50/60 Hz and 24 V AC/DC supply voltages.
Manual operation with handwheel.
IP 65 protection (IP 67 on request).
Mounting to valves made via yoke or mounting flange DIN 3358, enabling easy connection to all types of valves. Standard version is suitable for ADCATrol valves.
Sturdy metal main frame for mainboard and accessories.
Mechanical stroke indication via anti-rotation bar.
Friction clutch for easy and tool-free adaptation to the valve stroke.
Universally usable actuators due to control via 3-point-step controllers and analog input signals (0(2) to 10 V, 0(4) to 20 mA).

OPTIONS AND ACCESSORIES:
Additional limit switches.
Electric fail-safe with super capacitors.
Local control to enable manual operation through the use of buttons and on site diagnosis without needing a PC.
Profibus DP and Modbus RTU communication.
Heating resistor.
IP 67 metal cover.
Silicone free version.

USE:
Actuation of ADCATrol control valves, or others on request.

AVAILABLE MODELS:
ELS20, ELS20.1, ELS45, ELS45.1, ELS80, ELS100, ELS100.1, ELS140, ELS200 and ELS250.

We reserve the right to change the design and material of this product without notice.

TECHNICAL DATA

MODEL	ELS20	ELS20.1	ELS45	ELS45.1	ELS80
Maximum thrust **(a)**	2,3 kN		4,5 kN		8 kN
Operating speed **(b)**	0,45 to 0,9 mm/s	1 to 2 mm/s	0,45 to 0,9 mm/s	2 to 4 mm/s	0,3 to 0,7 mm/s
Maximum stroke	50 mm				50 mm (65 mm on request)
Supply voltages	115 V AC / 230 V AC / 360 to 575 V AC 3~ / 24 V AC/DC				
Supply frequency	50 Hz / 60 Hz / continuous				
Type of duty acc. to IEC 60034-1	S2 30 min, S4 50% ED @ 25 ºC				
Cable entry	2 x M20 x 1,5 and 1 x M16 x 1,5				
Electrical connection	Terminal configuration according to the electric connection wiring diagram inside the actuator cover				
Internal fault monitoring	Torque, position set value, active position value, position, power supply, temperature of electonic board, etc.				
Diagnostics function	Stores cumulated operation data (motor and total running time, number of motor starts) and data sets of current values (set value, feedback value, torque, temperature and error messages)				
Analog position input	Selectable between 0(4) to 20 mA and 0(2) to 10 V; Adjustable split-range operation				
Positioner function	Dead-band ajustable between 0,5 – 5% of set value range				
Break away torque	Adjustable up to 150% torque for up to 2,5 seconds to break away a valve in the end positions				
Automatic commissioning	Recognition of the end position(s) and autoscaling of set value and feedback according to the valve stroke				
Mounting position	As desired, except downward position				
Ambient temperature	-20 to 60 ºC				
Over-voltage category	II				
Position indicator	By anti-rotation bar				
Manual adjustment	Handwheel				
Type of protection	IP 65 (IP 67 on request)				

MODEL	ELS100	ELS100.1	ELS140	ELS200	ELS250
Maximum thrust **(a)**	10 kN		14 kN	20 kN	25 kN
Operating speed **(b)**	0,2 to 0,35 mm/s	0,85 to 1,7 mm/s	0,65 to 1,3 mm/s	0,2 to 0,4 mm/s	
Maximum stroke	50 mm (65 mm on request)		65 mm	95 mm	
Supply voltages	115 V AC / 230 V AC / 360 to 575 V AC 3~ / 24 V AC/DC				
Supply frequency	50 Hz / 60 Hz / continuous				
Type of duty acc. to IEC 60034-1	S2 30 min, S4 50% ED @ 25 ºC				
Cable entry	2 x M20 x 1,5 and 1 x M16 x 1,5			3 x M20 x 1,5	
Electrical connection	Terminal configuration according to the electric connection wiring diagram inside the actuator cover				
Internal fault monitoring	Torque, position set value, active position value, position, power supply, temperature of electonic board, etc.				
Diagnostics function	Stores cumulated operation data (motor and total running time, number of motor starts) and data sets of current values (set value, feedback value, torque, temperature and error messages)				
Analog position input	Selectable between 0(4) to 20 mA and 0(2) to 10 V; Adjustable split-range operation				
Positioner function	Dead-band ajustable between 0,5 – 5% of set value range				
Break away torque	Adjustable up to 150% torque for up to 2,5 seconds to break away a valve in the end positions				
Automatic commissioning	Recognition of the end position(s) and autoscaling of set value and feedback according to the valve stroke				
Mounting position	As desired, except downward position				
Ambient temperature	-20 to 60 ºC				
Over-voltage category	II				
Position indicator	By anti-rotation bar				
Manual adjustment	Handwheel				
Type of protection	IP 65 (IP 67 on request)				

(a) Permissible average modulating thrust over the entire travel is 50% of the maximum thrust.
(b) Adjustable speed. At 60 Hz, the operating speed and input power increase by 20%.

We reserve the right to change the design and material of this product without notice.

POWER RATINGS		ELS20	ELS20.1	ELS45	ELS45.1	ELS80
230 V	Power consumption **(a)**	13 W	38 W	19 W	57 W	38 W
	Rated current	0,07 A	0,22 A	0,11 A	0,33 A	0,22 A
	Maximum current	0,1 A	0,29 A	0,14 A	0,43 A	0,29 A
115 VAC	Power consumption **(a)**	13 W	38 W	19 W	57 W	38 W
	Rated current	0,15 A	0,44 A	0,23 A	0,66 A	0,44 A
	Maximum current	0,2 A	0,57 A	0,3 A	0,86 A	0,57 A
24 VAC/DC	Power consumption **(a)**	12 W (AC) / 11 W (DC)	35 W (AC) / 32 W (DC)	18 W (AC) / 16 W (DC)	53 W (AC) / 48 W (DC)	35 W (AC) / 32 W (DC)
	Rated current	0,7 A (AC) / 0,4 A (DC)	2,1 A (AC) / 1,3 A (DC)	1,1 A (AC) / 0,7 A (DC)	3,15 A (AC) / 2 A (DC)	2,1 A (AC) / 1,3 A (DC)
	Maximum current	0,9 A (AC) / 0,6 A (DC)	2,7 A (AC) / 1,7 A (DC)	1,4 A (AC) / 0,9 A (DC)	4,1 A (AC) / 2,6 A (DC)	2,7 A (AC) / 1,7 A (DC)
360 to 575 VAC	Power consumption **(a)**	22 W *	47 W *	28 W *	66 W *	47 W *
	Rated current	0,08 A *	0,1 A *	0,11 A *	0,25 A *	0,18 A *
	Maximum current	0,11 A *	0,13 A *	0,14 A *	0,33 A *	0,23 A *

POWER RATINGS		ELS100	ELS100.1	ELS140	ELS200	ELS250
230 V	Power consumption **(a)**	32 W	78 W	88 W	81 W	88 W
	Rated current	0,18 A	0,42 A	0,48 A	0,44 A	0,48 A
	Maximum current	0,24 A	0,55 A	0,62 A	0,57 A	0,62 A
115 VAC	Power consumption **(a)**	32 W	78 W	88 W	81 W	88 W
	Rated current	0,37 A	0,84 A	0,95 A	0,88 A	0,95 A
	Maximum current	0,48 A	1,1 A	1,24 A	1,15 A	1,24 A
24 VAC/DC	Power consumption **(a)**	30 W (AC) / 26 W (DC)	73 W (AC) / 61 W (DC)	82 W (AC) / 69 W (DC)	76 W (AC) / 63 W (DC)	82 W (AC) / 69 W (DC)
	Rated current	1,76 A (AC) / 1,1 A (DC)	4 A (AC) / 2,5 A (DC)	4,6 A (AC) / 2,9 A (DC)	4,2 A (AC) / 2,6 A (DC)	4,6 A (AC) / 2,9 A (DC)
	Maximum current	2,3 A (AC) / 1,4 A (DC)	5,3 A (AC) / 3,3 A (DC)	6 A (AC) / 3,7 A (DC)	5,5 A (AC) / 3,4 A (DC)	6 A (AC) / 3,7 A (DC)
360 to 575 VAC	Power consumption **(a)**	41 W *	82 W *	91 W *	85 W *	91 W *
	Rated current	0,15 A *	0,31 A *	0,35 A *	0,32 A *	0,35 A *
	Maximum current	0,2 A *	0,4 A *	0,45 A *	0,42 A *	0,42 A *

(a) At maximum thrust. Data may vary depending on accessories.
* At 400 V 3 ~ and 50 Hz.

We reserve the right to change the design and material of this product without notice.

OPTIONS AND ACCESSORIES

DESIGNATION	DESCRIPTION
2WE	Two additional limit switches for signaling end positions or intermediate positions, freely adjustable, with silver-plated contacts, 0,1 to 10 A @ 230 V AC/DC
2WE-G	Two additional limit switches for signaling end positions or intermediate positions, freely adjustable, with gold-plated contacts for low voltage, 0,1 to 100 mA @ 30V DC/AC
FSCP	Fail-safe function with emergency power supply via super capacitors. Fail-safe position can be freely defined. Remark: Not retrofittable.
LCS	Illuminated display which allows visualization of the actuator status, including a lockable selector to switch between modes: automatic, manual process (on/off) , stop and parameter menu. Control buttons for manual movement, menu operations, display of diagnostics and adjustment of parameters. Remark: Not retrofittable.
LCS-USB	USB data cable to enable the communication between the actuator and a PC via a communication software.
HR	Heating resistor. Supply voltage 12 to 36 V AC/DC or 110 to 250 V AC/DC.
BZS	High durability bronze spindle parts. Remark: Only for actuators with 2,3 to 4,5 kN. Already included for standard actuators in case of higher thrusts. Not retrofittable.
IP67	Higher IP 67 enclosure protection with metal cover.
DTPB	Profibus DP communication interface. Including transmission of nominal and actual valve position (mm or %), report of monitoring and diagnostic data. Remark: Not retrofittable.
DTMB	Modbus RTU communication interface. Including transmission of nominal and actual valve position (mm or %), report of monitoring and diagnostic data. Remark: Not retrofittable.

ELECTRICAL CONNECTIONS

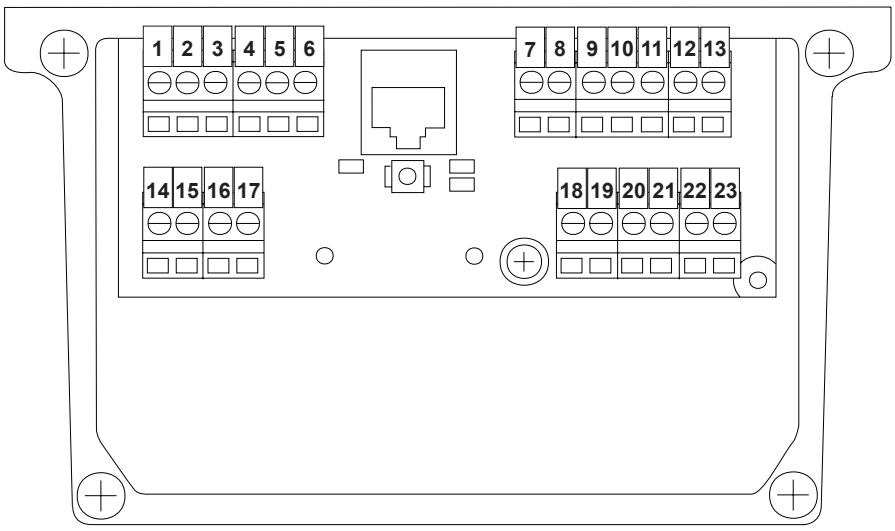

1	2	3	4	5	6	7	8	9	10	11	12	13	14	15	16	17	18	19	20	21	22	23	RJ45
+ 0(2) to 10 V	*+ 0(4) to 20 mA*	*GND*	*+ 0(2) to 10 V*	*+ 0(4) to 20 mA*	*GND*	*24 V DC*	*Maximum load*	*L /+ open*	*N / -*	*L /+ close*	*L /+ (24 V AC/DC)*	*N /- (24 V AC/DC)*	*24 V DC / 100 mA*	*+ 0(2) to 10 V*	*+ 0(4) to 20 mA*	*GND*					*L / + (see name plate)*	*N / - (see name plate)*	
Set value input			*Active position feedback*			*Monitor relay (volt-free)*		*Binary input signals*			*Fail safe signal*		*Supply*	*Actual value (process sensor)*			*Position switches (volt-free)*				*Power supply*		*PC comm.*

We reserve the right to change the design and material of this product without notice.

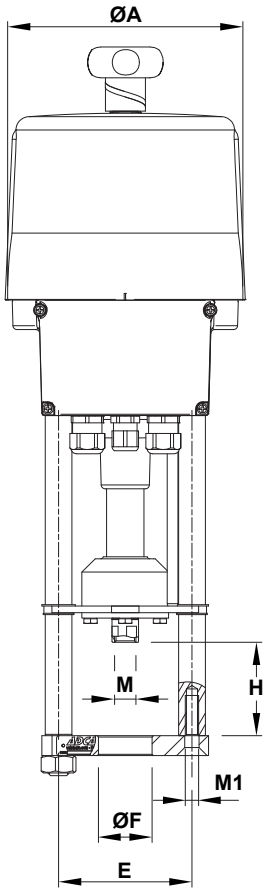

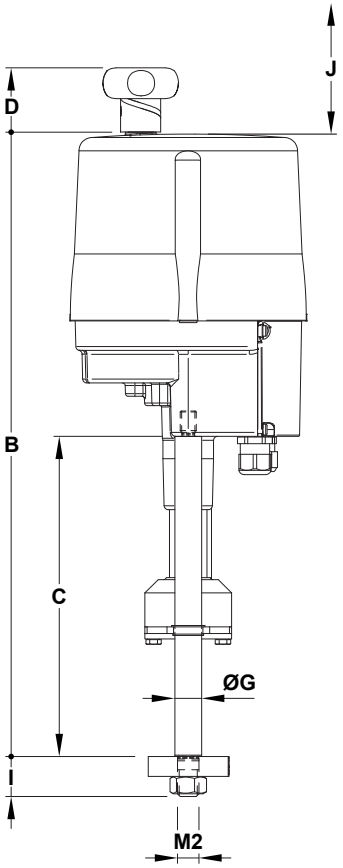

DIMENSIONS (mm)													
MODEL	**ØA**	**B**	**C**	**D**	**E**	**ØF**	**ØG**	**H**	**I**	**J ****	**M ***	**M1**	**M2**	**WGT. *** (kg)**
ELS20 / ELS45	180	453 / 480	175 / 202	50	100	40	20	70	30	100	M10 / M12	M12	M16	4,5
ELS80 / ELS100	180	490 / 520	210 / 240	50	100	40 / 45 / 65	20	70	30	100	M10 / M12 / M16	M12	M16	7,2
ELS140	180	563 / 583	250 / 270	52	100 / 132	45 / 65	20	70	30	120	M10 / M12 / M16	M12	M16	8
ELS200 / ELS250	250	720	450	–	155	45 / 65 / 80	32	78	45	230	M16 / M27	–	M20	23

* Depending on valve stem thread. Can be course or fine thread.
** Space required to remove the actuator cover.
*** Approximate weight without accessories and lower yoke flange.
Remark: Stem coupling, yoke dimensions, design and weight may vary depending on the ADCATrol control valve model. Consult the manufacturer.

We reserve the right to change the design and material of this product without notice.

ORDERING CODES ELS

GROUP DESIGNATION	ELS	20	1	X	X	5	X	X	X	A1	
ELS series – Intelligent linear electric actuator	ELS										
ACTUATOR MODEL											
ELS20		20									
See table below for other actuator model codes											
SUPPLY VOLTAGE											
230 V AC 50/60 Hz			1								
115 V AC 50/60 Hz			2								
360 to 575 V AC 3~ 50/60 Hz			5								
24 V AC/DC			6								
LIMIT SWITCHES											
Without additional limit switches				X							
Two additional limit switches 2WE				W							
Two additional limit switches with gold-plated contacts 2WE-G				G							
FAIL-SAFE FUNCTION											
Without emergency fail-safe function (fail in place)					X						
FSCP emergency fail-safe function via super capacitors					C						
TYPE OF PROTECTION											
With standard IP 65 enclosure protection						5					
Higher IP 67 enclosure protection with metal cover						7					
COMMUNICATION											
0(4) to 20 mA, 0(2) to 10 V							X				
DTMB Modbus RTU interface							M				
DTPB Profibus DP interface							P				
DISPLAY											
Without display								X			
With LCS display								D			
OTHER OPTIONS											
Without other options									X		
BZS bronze spindle parts (only for actuators with 1 to 4,5 kN)									Z		
YOKE DESIGN AND COUPLING											
ADCATrol V16/2, V25/2 and V303 series (1/2" to 2" – DN 15 to DN 50)										A1	
ADCAPure V926H, V926A (1/2" to 21/2") and V928 series (DN 15 to DN 50)										A3	
ADCATrol V16/2 series (21/2" to 4" – DN 65 to DN 100)										B1	
ADCATrol V16/2 w/ bellows, V25/2 and V303 series (21/2" to 4" – DN 65 to DN 100)										B2	
ADCAPure V926H (3" and 4") and V928 series (DN 65 to DN 100)										B3	
ADCATrol V25/2 series (5" to 6" – DN 125 to DN 150)										C2	
ADCATrol V25/2 series (8" – DN 200)										D2	
Other ADCATrol valves **(a)**										XX	
SPECIAL CONSTRUCTION / ADDITIONAL OPTIONS											
A full description must to be provided and validated in case of a non-standard construction											E

(a) Exact model and size must be specified – consult the manufacturer.
Remark: Options and accessories not mentioned in the ordering codes table must be requested separately, e.g.: ELS201XX5XXA1 fitted with HR heating resistor.
How to size: For selection of suitable actuator to use with ADCATrol control valves, consult TIS.GICV – Technical Information Sheet – Maximum Permissible Pressure Drops for ADCATrol and ADCAPure Control Valves – or consult the manufacturer.

ACTUATOR MODEL

MODEL	ELS20	ELS20.1	ELS45	ELS45.1	ELS80	ELS100	ELS100.1	ELS140	ELS200	ELS250
Code	20	21	40	41	60	70	71	74	80	82

We reserve the right to change the design and material of this product without notice.