TECHNICAL CATALOGUE

# ECOLOGICAL BALL VALVES: GREEN DVGW

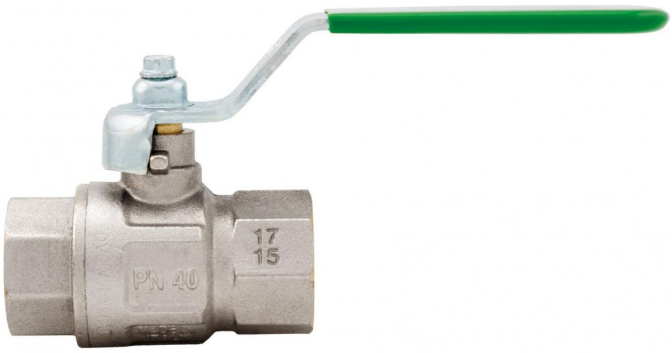

# ITAP AT A GLANCE

## THE COMPANY

ITAP SpA, founded in Lumezzane (Brescia) in 1972, is currently one of the leading production companies in Italy of **valves, fittings and distribution manifolds** for plumbing and heating systems.

Thanks to a fully automated production process, with 85 transfer machines and 55 assembly lines, it is capable of producing 400,000 pieces per day.

Our innate pursuit for innovation and observance of technical regulations is supported by the company certification ISO 9001. The company has always considered its focus on quality as the main tool to obtain significant business results: today ITAP SpA is proud to offer products bearing the approval of numerous international certifying bodies.







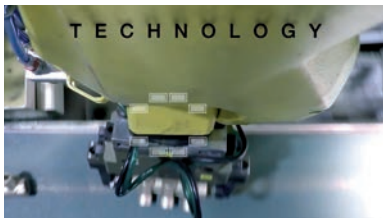


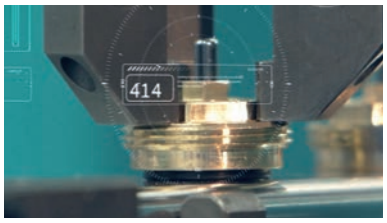


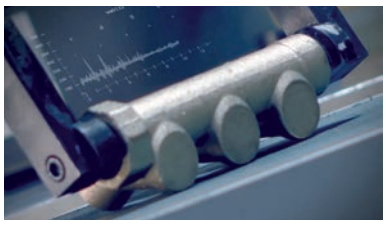







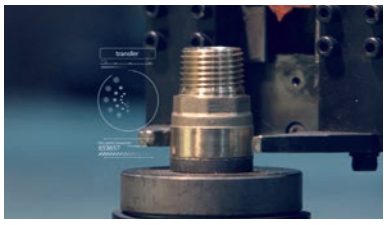

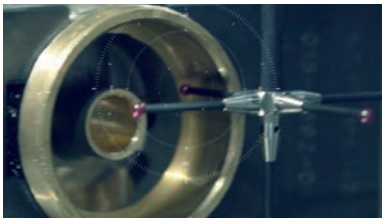






## ITAP products have obtained approvals by more than 30 certification bodies from all over the world.

# ECOLOGICAL BALL VALVES: GREEN DVGW

## 376 Green DVGW ball valve, full flow

Ecological ball valves in compliance with the new European regulation for drinkable water.
Approved in accordance with standard EN 13828 and Code of Practice DVGW W 570 for the distribution of water intended for human consumption.
Equipped with a ball designed to avoid the stagnation of water and eventual proliferation of bacteria inside the valve.
MADE OF LOW LEAD BRASS.
GREEN DVGW
DRINKABLE WATER. ANTILEGIONNAIRE'S DISEASE.

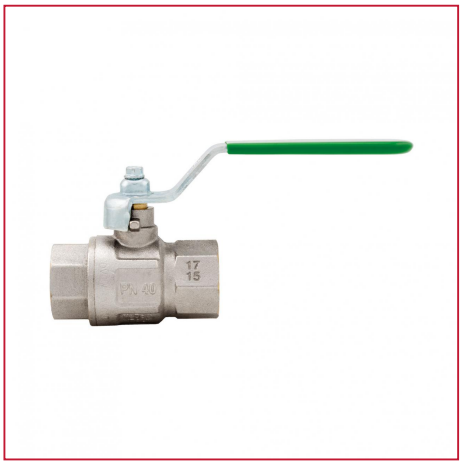

| MEASURE | PRESSURE | CODE | PACKING |
|---|---|---|---|
| 1/4" (DN 8) | 50bar/725psi | 376B014LF02 | 12/108 |
| 3/8" (DN 10) | 50bar/725psi | 376B038LF02 | 12/108 |
| 1/2" (DN 15) | 50bar/725psi | 376B012LF02 | 10/90 |
| 3/4" (DN 20) | 40bar/580psi | 376B034LF02 | 8/48 |
| 1" (DN 25) | 40bar/580psi | 376B100LF02 | 6/48 |
| 1"1/4 (DN 32) | 30bar/435psi | 376B114LF02 | 2/16 |
| 1"1/2 (DN 40) | 30bar/435psi | 376B112LF02 | 2/10 |
| 2" (DN 50) | 25bar/362.5psi | 376B200LF02 | 2/10 |

### CERTIFICATIONS

### TECHNICAL SPECIFICATIONS

Female/female threads.
Flat lever handle in lined steel.
Body in nickel-plated brass.
Minimum and maximum working temperatures: -20°C, 150°C in absence of steam.
Female threads: ISO 7/1 Rp parallel (equivalent to DIN EN 10226-1 and BS EN 10226-1).

# ECOLOGICAL BALL VALVES: GREEN DVGW

## OVERALL DIMENSIONS

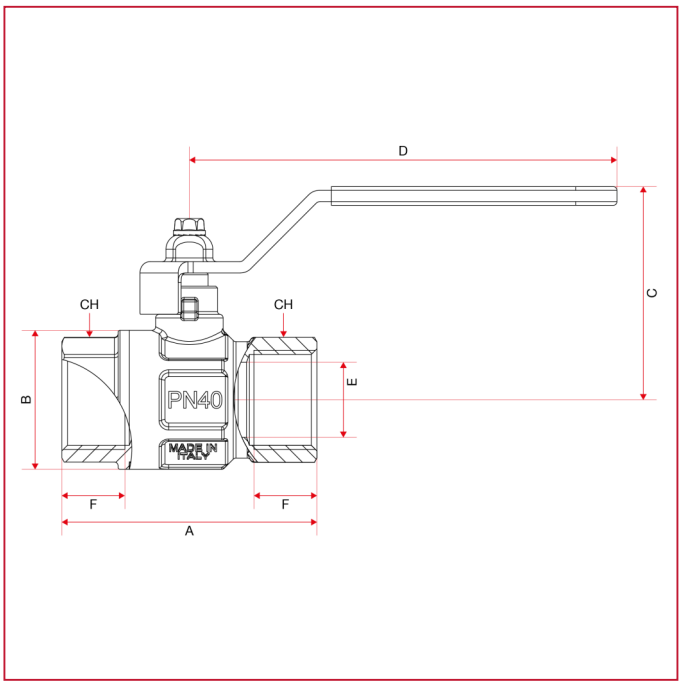


| | 1/4" | 3/8" | 1/2" | 3/4" | 1" | 1"1/4 | 1"1/2 | 2" |
|---|---|---|---|---|---|---|---|---|
| DN | 8 | 10 | 15 | 20 | 25 | 32 | 40 | 50 |
| A | 49,5 | 52,4 | 61 | 68 | 85 | 99,5 | 109 | 130 |
| B | 23,5 | 24 | 30,5 | 37 | 45,5 | 58 | 71 | 85 |
| C | 42,3 | 42,3 | 50,8 | 56,8 | 60,8 | 76,8 | 92,3 | 99,3 |
| D | 86 | 86 | 93 | 114 | 114 | 138,5 | 158,5 | 158,5 |
| E | 10 | 10 | 15 | 20 | 25 | 32 | 40 | 50 |
| F | 11 | 11,4 | 15 | 16,3 | 19,1 | 21,4 | 21,4 | 25,7 |
| CH | 18 | 21 | 25 | 31 | 38 | 47 | 54 | 66 |
| Kg/cm2 bar | 50 | 50 | 50 | 40 | 40 | 30 | 30 | 25 |
| LBS - psi | 725 | 725 | 725 | 580 | 580 | 435 | 435 | 362,5 |

# ECOLOGICAL BALL VALVES: GREEN DVGW

## MATERIALS

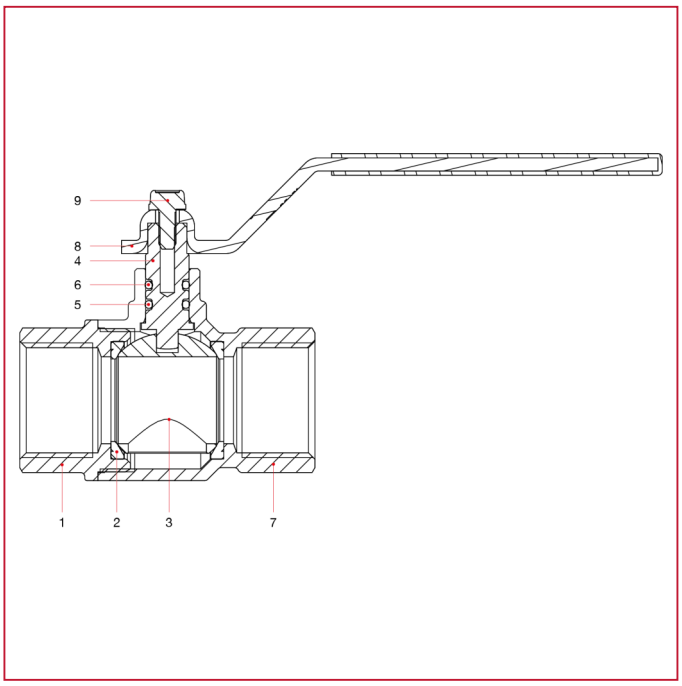


| POS. | DESCRIPTION | N. | MATERIAL |
|---|---|---|---|
| 1 | Female end adapter | 1 | Nickel-plated brass CW510L |
| 2 | Seat | 2 | P.T.F.E. |
| 3 | Ball | 1 | Chrome-plated brass CW510L |
| 4 | Stem | 1 | Brass CW510L |
| 5 | O-ring | 1 | NBR |
| 6 | O-ring | 1 | Viton® |
| 7 | Body | 1 | Nickel-plated brass CW510L |
| 8 | Flat lever handle | 1 | Zinc-plated and plastic coated steel P04 |
| 9 | Screw | 1 | Zinc-plated steel C4C |

# ECOLOGICAL BALL VALVES: GREEN DVGW

**INSTALLATION**

The itap S.p.A.'s valves are bi-directional, that means they manage the flow in both the directions.
The valves are composed by a ball, two seal in PTFE material, one stem, two sailing rings (O-Rings), one handle and a couple of parts made of brass (body and end adopter) that contain them and that are assembled by means of threat and a sealed material to obtain their aim.
In order to avoid that the sealed material gets broken and then the valve looses the connection between the body and the end-adapter, it's necessary to avoid to submit the two parts under the influence of a torque.
For the installation normal hydraulic practices must be used, and especially:
- ones have to be sure that the two pipes are correctly aligned;
- during the assembling process the installer has to apply its assembling tools at the end that is nearest to the pipe;
- the application of the sealing materials by the fitter (PTFE or hempen cloth) must be limited at the threat zone. An excess should interferes in the ball-gasket's closure zone, compromising the tightness.
- in the case that the fluid transported presents some impurities (dust, water too hard, etc.) ones have to remove these impurities by the means of a filter. Otherwise they could damage the seals.

DISASSEMBLY

To remove the valve from the pipe line or anyhow before to unscrew the junctions linked to it:
- wear the clothing protective normally required to work with the fluid transported within the line;
- depressurizze the line and operate in this way:
  - positioning the valve in opened position and than empty the line;
  - handle the valve to put down the residue pressure contained inside the space between the ball and the body before of remove it from the line;
  - during the disassembly apply the screw tool at the end of the valve nearest the pipe;

MAINTENANCE

Verify the valve periodically, according to its application's field and its works' field and its work's conditions, in order to be sure that the valve works correctly.

## LOSS DIAGRAM (With water)

| | 1/4" | 3/8" | 1/2" | 3/4" | 1" | 1"1/4 | 1"1/2 | 2" |
|---|---|---|---|---|---|---|---|---|
| KV | 3,21 | 4,88 | 15,32 | 25,96 | 41,29 | 63,27 | 100 | 167 |

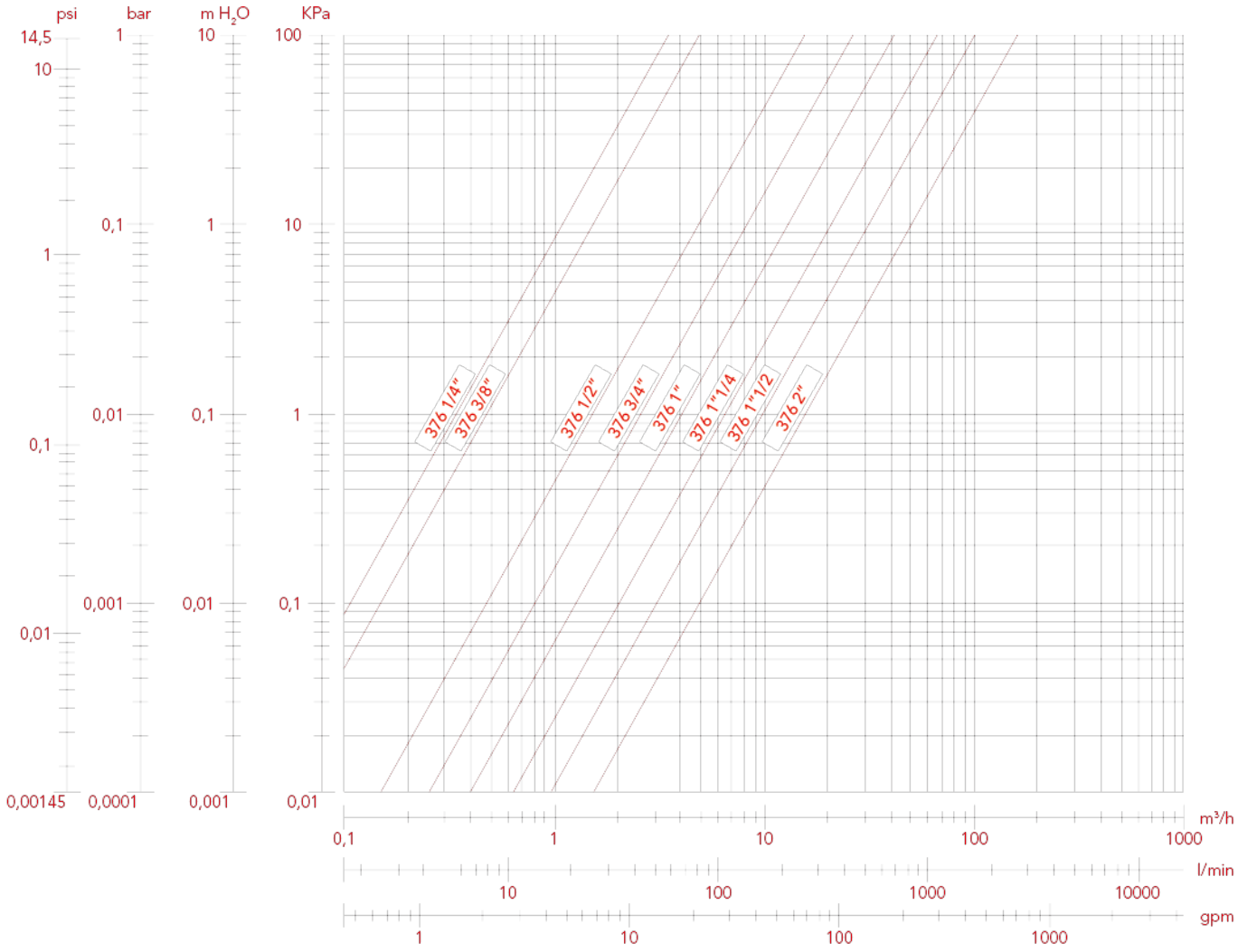

**PRESSURE-TEMPERATURE DIAGRAM**

The values shown by the dropping lines state the maximum limit of employment of the valves.
The shown values are approximate.

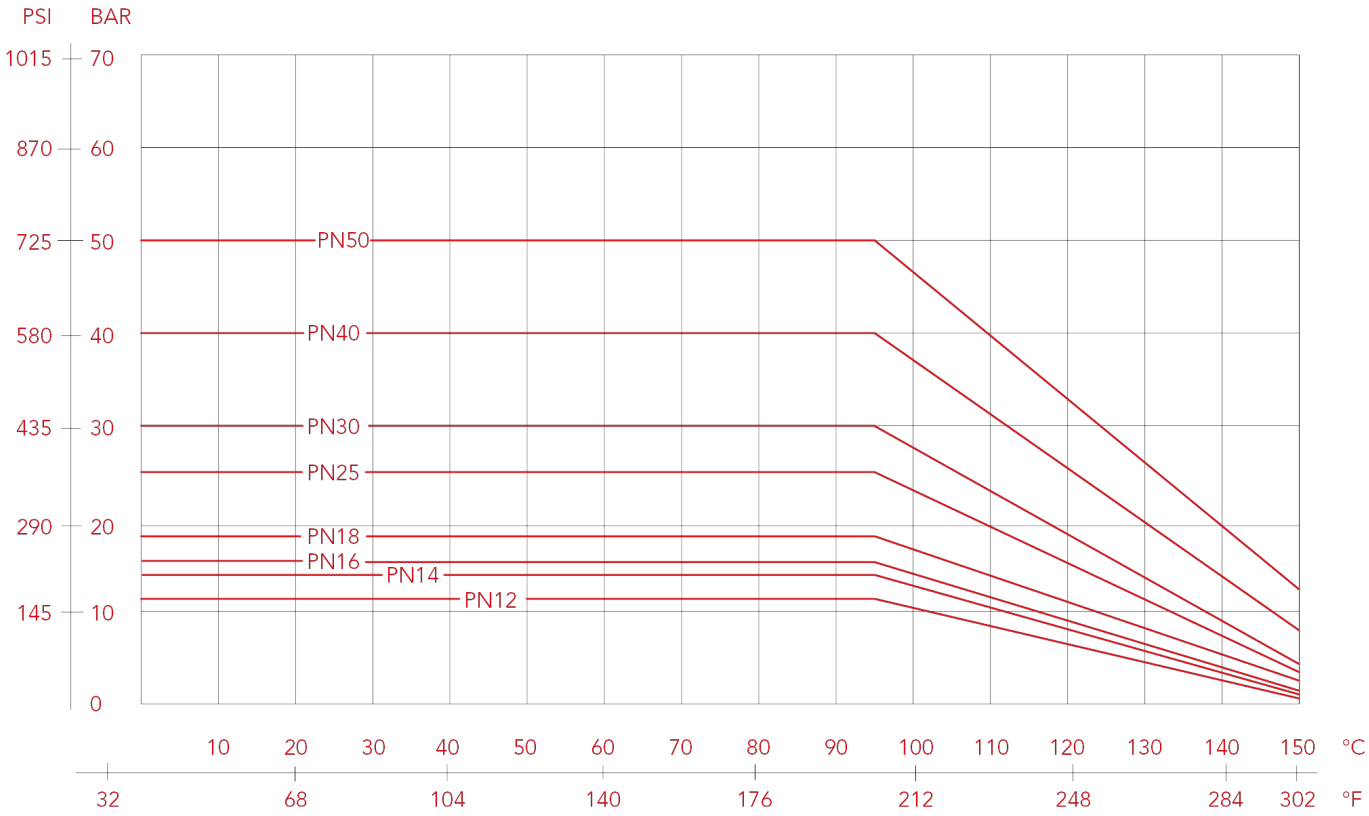

# ECOLOGICAL BALL VALVES: GREEN DVGW

## 377 Green DVGW ball valve, full flow

Ecological ball valves in compliance with the new European regulation for drinkable water.
Approved in accordance with standard EN 13828 and Code of Practice DVGW W 570 for the distribution of water intended for human consumption.
Equipped with a ball designed to avoid the stagnation of water and eventual proliferation of bacteria inside the valve.
MADE OF LOW LEAD BRASS.
GREEN DVGW
DRINKABLE WATER. ANTILEGIONNAIRE'S DISEASE.

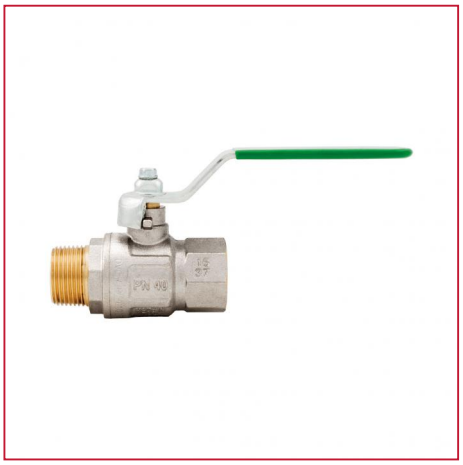

| MEASURE | PRESSURE | CODE | PACKING |
|---|---|---|---|
| 1/4" (DN 8) | 50bar/725psi | 377B014LF02 | 12/108 |
| 3/8" (DN 10) | 50bar/725psi | 377B038LF02 | 12/108 |
| 1/2" (DN 15) | 50bar/725psi | 377B012LF02 | 10/80 |
| 3/4" (DN 20) | 40bar/580psi | 377B034LF02 | 8/48 |
| 1" (DN 25) | 40bar/580psi | 377B100LF02 | 6/48 |
| 1"1/4 (DN 32) | 30bar/435psi | 377B114LF02 | 2/16 |
| 1"1/2 (DN 40) | 30bar/435psi | 377B112LF02 | 2/10 |
| 2" (DN 50) | 25bar/362.5psi | 377B200LF02 | 1/5 |

### CERTIFICATIONS

### TECHNICAL SPECIFICATIONS

Male/female threads.
Flat lever handle in lined steel.
Body in nickel-plated brass.
Minimum and maximum working temperatures: -20°C, 150°C in absence of steam.
Female threads: ISO 7/1 Rp parallel (equivalent to DIN EN 10226-1 and BS EN 10226-1).
Male threads ISO 7/1 R taper (equivalent to DIN EN 10226-1 and BS EN 10226-1).

# ECOLOGICAL BALL VALVES: GREEN DVGW

## OVERALL DIMENSIONS

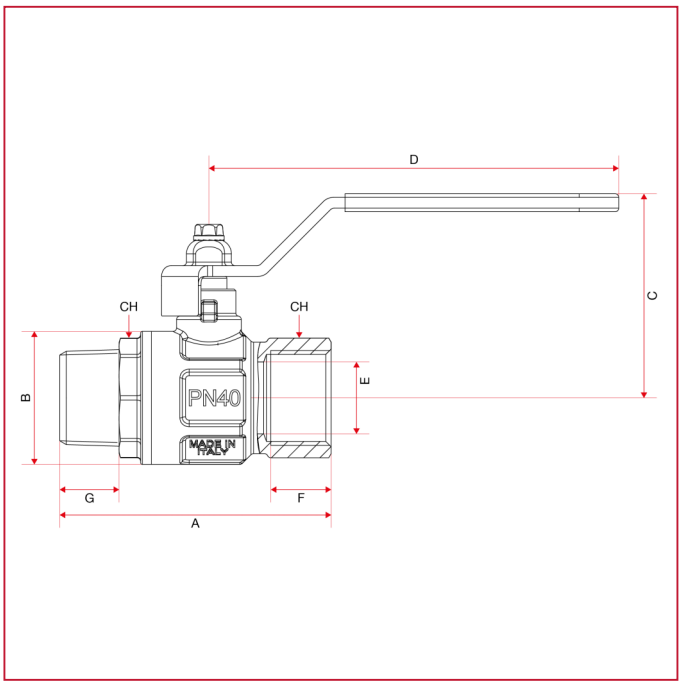


| | 1/4" | 3/8" | 1/2" | 3/4" | 1" | 1"1/4 | 1"1/2 | 2" |
|---|---|---|---|---|---|---|---|---|
| DN | 8 | 10 | 15 | 20 | 25 | 32 | 40 | 50 |
| A | 56,9 | 58,9 | 68 | 75,5 | 90,5 | 105 | 115,5 | 135,5 |
| B | 23,5 | 24 | 30,5 | 37 | 45,5 | 58 | 71 | 85 |
| C | 42,3 | 42,3 | 50,8 | 56,8 | 60,8 | 76,8 | 92,3 | 99,3 |
| D | 86 | 86 | 93 | 114 | 114 | 138,5 | 158,5 | 158,5 |
| E | 8 | 10 | 15 | 20 | 25 | 32 | 39 | 50 |
| F | 11 | 11,4 | 15 | 16,3 | 19,1 | 21,4 | 21,4 | 25,7 |
| G | 11 | 11,5 | 15 | 16,5 | 19 | 21,5 | 21,5 | 26 |
| CH | 18 | 21 | 25 | 31 | 38 | 47 | 54 | 66 |
| Kg/cm2 bar | 50 | 50 | 50 | 40 | 40 | 30 | 30 | 25 |
| LBS - psi | 725 | 725 | 725 | 580 | 580 | 435 | 435 | 362,5 |

# ECOLOGICAL BALL VALVES: GREEN DVGW

## MATERIALS

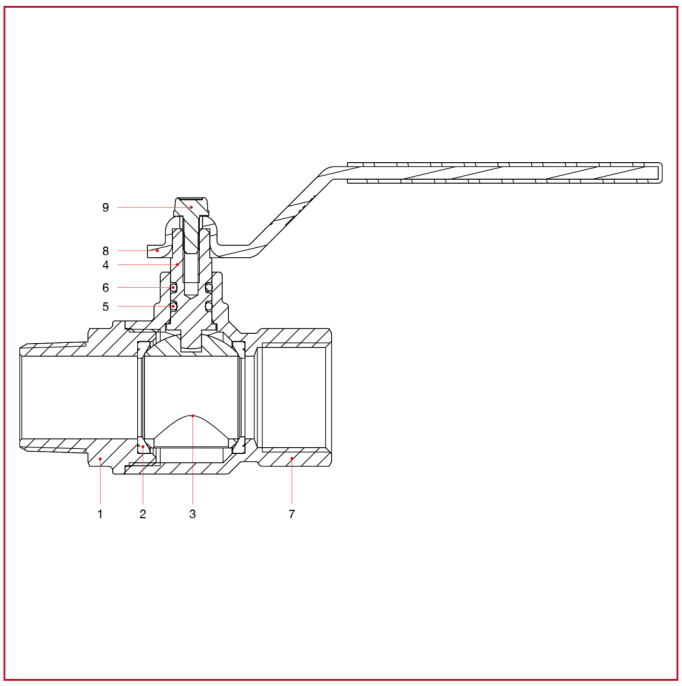


| POS. | DESCRIPTION | N. | MATERIAL |
|---|---|---|---|
| 1 | Male end adapter | 1 | Nickel-plated brass CW510L |
| 2 | Seat | 2 | P.T.F.E. |
| 3 | Ball | 1 | Chrome-plated brass CW510L |
| 4 | Stem | 1 | Brass CW510L |
| 5 | O-ring | 1 | NBR |
| 6 | O-ring | 1 | Viton® |
| 7 | Body | 1 | Nickel-plated brass CW510L |
| 8 | Flat lever handle | 1 | Zinc-plated and plastic coated steel P04 |
| 9 | Screw | 1 | Zinc-plated steel C4C |

# ECOLOGICAL BALL VALVES: GREEN DVGW

**INSTALLATION**

The itap S.p.A.'s valves are bi-directional, that means they manage the flow in both the directions.
The valves are composed by a ball, two seal in PTFE material, one stem, two sailing rings (O-Rings), one handle and a couple of parts made of brass (body and end adopter) that contain them and that are assembled by means of threat and a sealed material to obtain their aim.
In order to avoid that the sealed material gets broken and then the valve looses the connection between the body and the end-adapter, it's necessary to avoid to submit the two parts under the influence of a torque.
For the installation normal hydraulic practices must be used, and especially:
- ones have to be sure that the two pipes are correctly aligned;
- during the assembling process the installer has to apply its assembling tools at the end that is nearest to the pipe;
- the application of the sealing materials by the fitter (PTFE or hempen cloth) must be limited at the threat zone. An excess should interferes in the ball-gasket's closure zone, compromising the tightness.
- in the case that the fluid transported presents some impurities (dust, water too hard, etc.) ones have to remove these impurities by the means of a filter. Otherwise they could damage the seals.

DISASSEMBLY

To remove the valve from the pipe line or anyhow before to unscrew the junctions linked to it:
- wear the clothing protective normally required to work with the fluid transported within the line;
- depressurizze the line and operate in this way:
  - positioning the valve in opened position and than empty the line;
  - handle the valve to put down the residue pressure contained inside the space between the ball and the body before of remove it from the line;
  - during the disassembly apply the screw tool at the end of the valve nearest the pipe;

MAINTENANCE

Verify the valve periodically, according to its application's field and its works' field and its work's conditions, in order to be sure that the valve works correctly.

## LOSS DIAGRAM (With water)

| | 1/4" | 3/8" | 1/2" | 3/4" | 1" | 1"1/4 | 1"1/2 | 2" |
|---|---|---|---|---|---|---|---|---|
| KV | 3,21 | 4,88 | 15,32 | 25,96 | 41,29 | 63,27 | 100 | 167 |

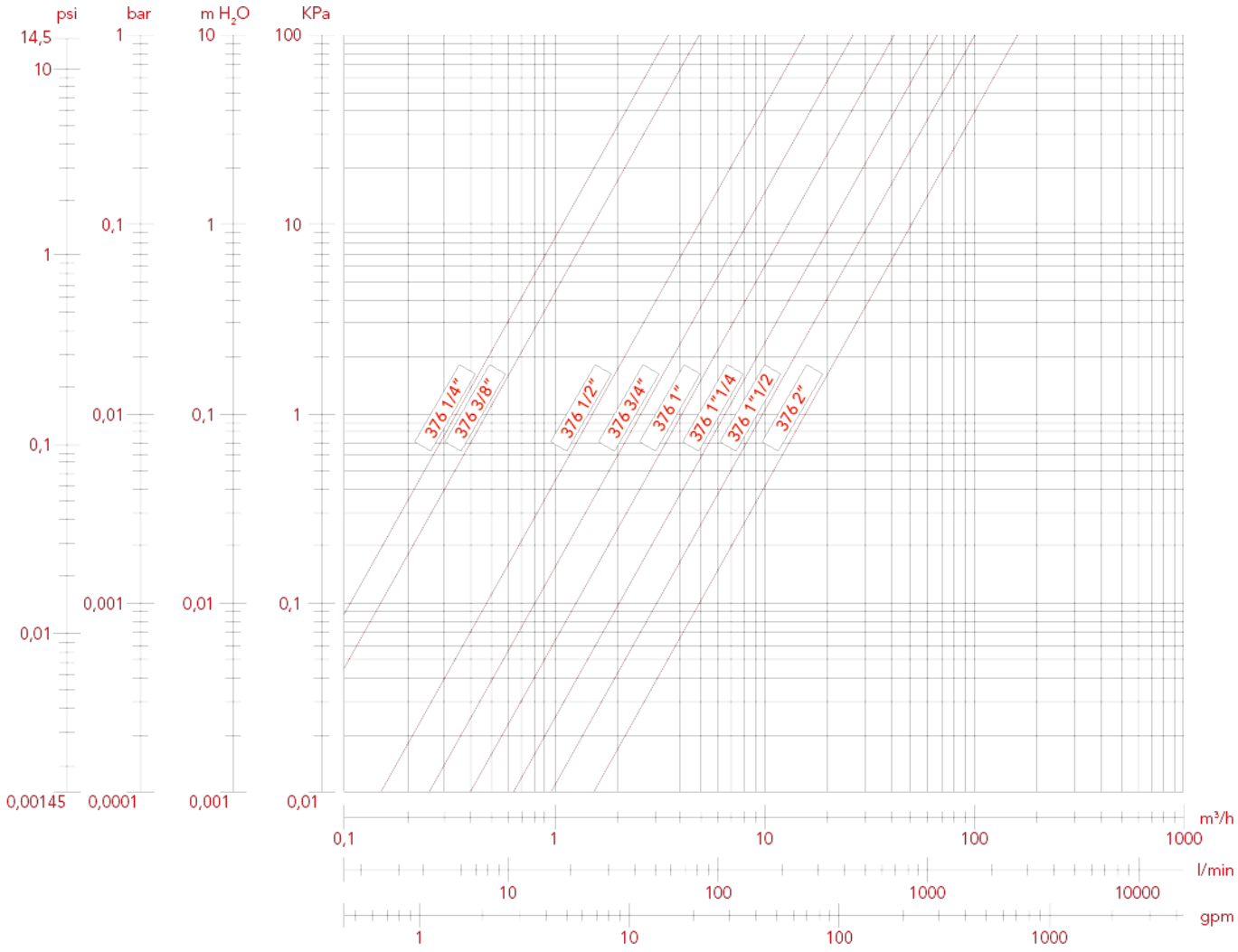

**PRESSURE-TEMPERATURE DIAGRAM**

The values shown by the dropping lines state the maximum limit of employment of the valves.
The shown values are approximate.

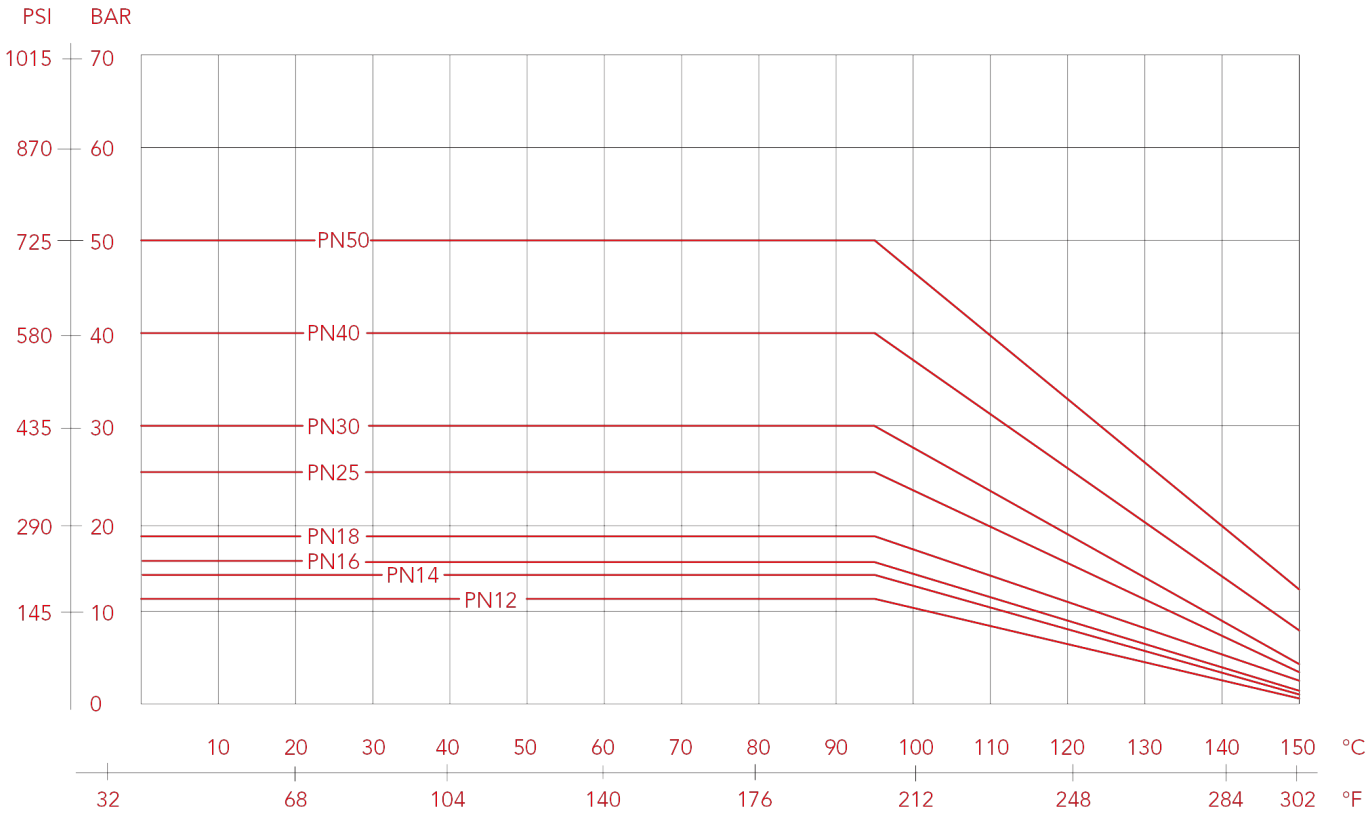

# ECOLOGICAL BALL VALVES: GREEN DVGW

## 378 Green DVGW ball valve, full flow

Ecological ball valves in compliance with the new European regulation for drinkable water.
Approved in accordance with standard EN 13828 and Code of Practice DVGW W 570 for the distribution of water intended for human consumption.
Equipped with a ball designed to avoid the stagnation of water and eventual proliferation of bacteria inside the valve.
MADE OF LOW LEAD BRASS.
GREEN DVGW
DRINKABLE WATER. ANTILEGIONNAIRE'S DISEASE.




| MEASURE | PRESSURE | CODE | PACKING |
|---|---|---|---|
| 1/4" (DN 8) | 50bar/725psi | 378B014LF02 | 15/180 |
| 3/8" (DN 10) | 50bar/725psi | 378B038LF02 | 15/180 |
| 1/2" (DN 15) | 50bar/725psi | 378B012LF02 | 10/120 |
| 3/4" (DN 20) | 40bar/580psi | 378B034LF02 | 8/80 |
| 1" (DN 25) | 40bar/580psi | 378B100LF02 | 6/48 |

### CERTIFICATIONS

### TECHNICAL SPECIFICATIONS

Female/female threads.
T handle in aluminium.
Body in nickel-plated brass.
Minimum and maximum working temperatures: -20°C, 150°C in absence of steam.
Female threads: ISO 7/1 Rp parallel (equivalent to DIN EN 10226-1 and BS EN 10226-1).

# ECOLOGICAL BALL VALVES: GREEN DVGW

## OVERALL DIMENSIONS

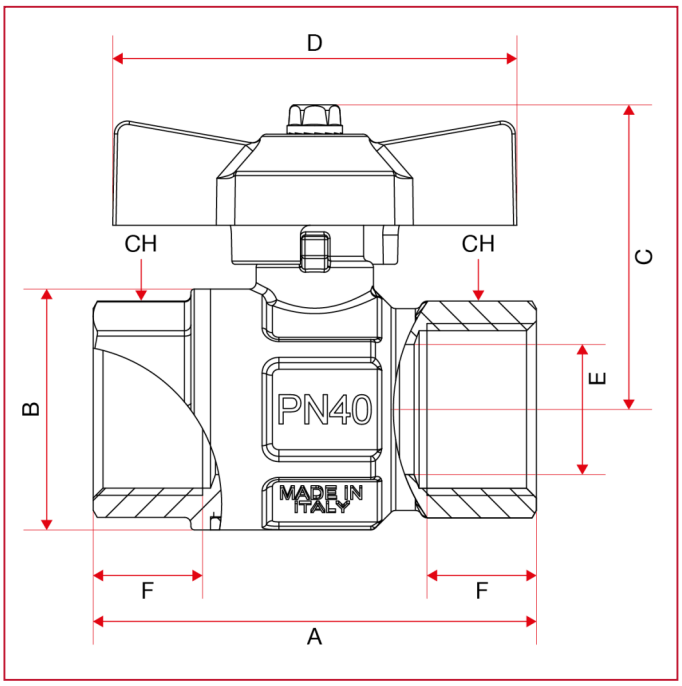


| | 1/4" | 3/8" | 1/2" | 3/4" | 1" |
|---|---|---|---|---|---|
| DN | 8 | 10 | 15 | 20 | 25 |
| A | 49,5 | 52,4 | 61 | 68 | 85 |
| B | 23,5 | 24 | 30,5 | 37 | 45,5 |
| C | 37,3 | 37,3 | 43,8 | 46,8 | 50,8 |
| D | 47 | 47 | 54 | 62 | 62 |
| E | 10 | 10 | 15 | 20 | 25 |
| F | 11 | 11,4 | 15 | 16,3 | 19,1 |
| CH | 18 | 21 | 25 | 31 | 38 |
| Kg/cm2 bar | 50 | 50 | 50 | 40 | 40 |
| LBS - psi | 725 | 725 | 725 | 580 | 580 |

# ECOLOGICAL BALL VALVES: GREEN DVGW

## MATERIALS

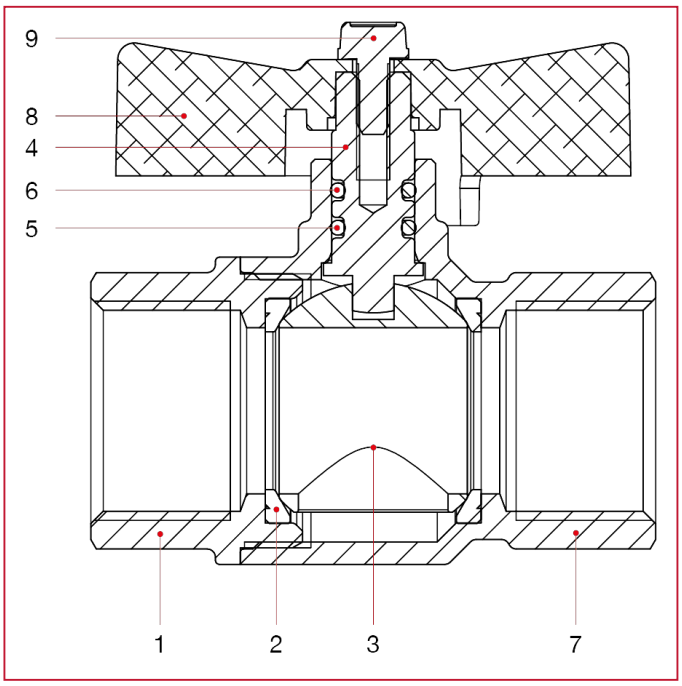


| POS. | DESCRIPTION | N. | MATERIAL |
|---|---|---|---|
| 1 | Female end adapter | 1 | Nickel-plated brass CW510L |
| 2 | Seat | 2 | P.T.F.E. |
| 3 | Ball | 1 | Chrome-plated brass CW510L |
| 4 | Stem | 1 | Brass CW510L |
| 5 | O-ring | 1 | NBR |
| 6 | O-ring | 1 | Viton® |
| 7 | Body | 1 | Nickel-plated brass CW510L |
| 8 | T handle | 1 | Varnished aluminium |
| 9 | Screw | 1 | Zinc-plated steel C4C |

# ECOLOGICAL BALL VALVES: GREEN DVGW

**INSTALLATION**

The itap S.p.A.'s valves are bi-directional, that means they manage the flow in both the directions.
The valves are composed by a ball, two seal in PTFE material, one stem, two sailing rings (O-Rings), one handle and a couple of parts made of brass (body and end adopter) that contain them and that are assembled by means of threat and a sealed material to obtain their aim.
In order to avoid that the sealed material gets broken and then the valve looses the connection between the body and the end-adapter, it's necessary to avoid to submit the two parts under the influence of a torque.
For the installation normal hydraulic practices must be used, and especially:
- ones have to be sure that the two pipes are correctly aligned;
- during the assembling process the installer has to apply its assembling tools at the end that is nearest to the pipe;
- the application of the sealing materials by the fitter (PTFE or hempen cloth) must be limited at the threat zone. An excess should interferes in the ball-gasket's closure zone, compromising the tightness.
- in the case that the fluid transported presents some impurities (dust, water too hard, etc.) ones have to remove these impurities by the means of a filter. Otherwise they could damage the seals.

DISASSEMBLY

To remove the valve from the pipe line or anyhow before to unscrew the junctions linked to it:
- wear the clothing protective normally required to work with the fluid transported within the line;
- depressurizze the line and operate in this way:
  - positioning the valve in opened position and than empty the line;
  - handle the valve to put down the residue pressure contained inside the space between the ball and the body before of remove it from the line;
  - during the disassembly apply the screw tool at the end of the valve nearest the pipe;

MAINTENANCE

Verify the valve periodically, according to its application's field and its works' field and its work's conditions, in order to be sure that the valve works correctly.

## LOSS DIAGRAM (With water)

| | 1/4" | 3/8" | 1/2" | 3/4" | 1" |
|---|---|---|---|---|---|
| KV | 3,21 | 4,88 | 15,32 | 25,96 | 41,29 |

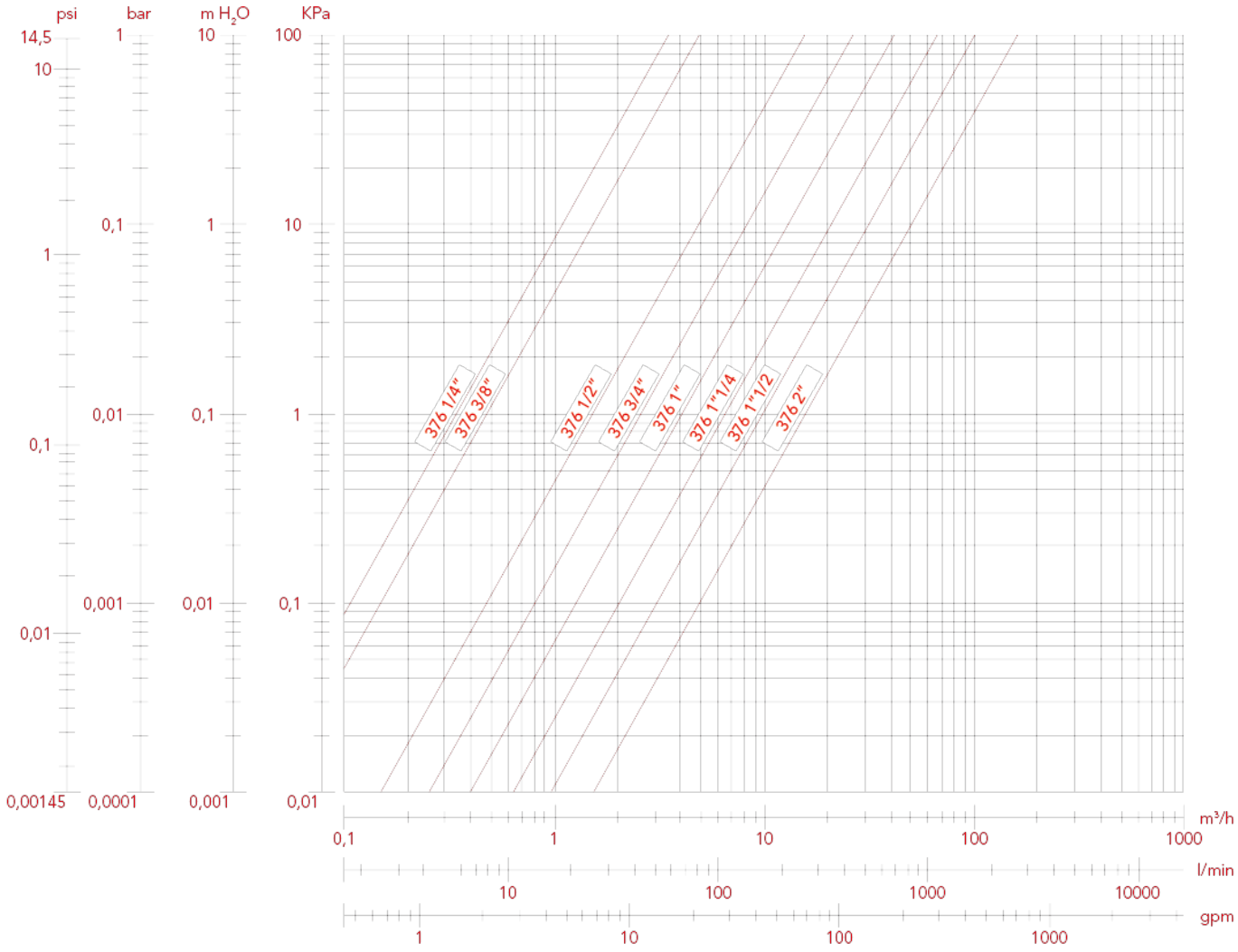

**PRESSURE-TEMPERATURE DIAGRAM**

The values shown by the dropping lines state the maximum limit of employment of the valves.
The shown values are approximate.

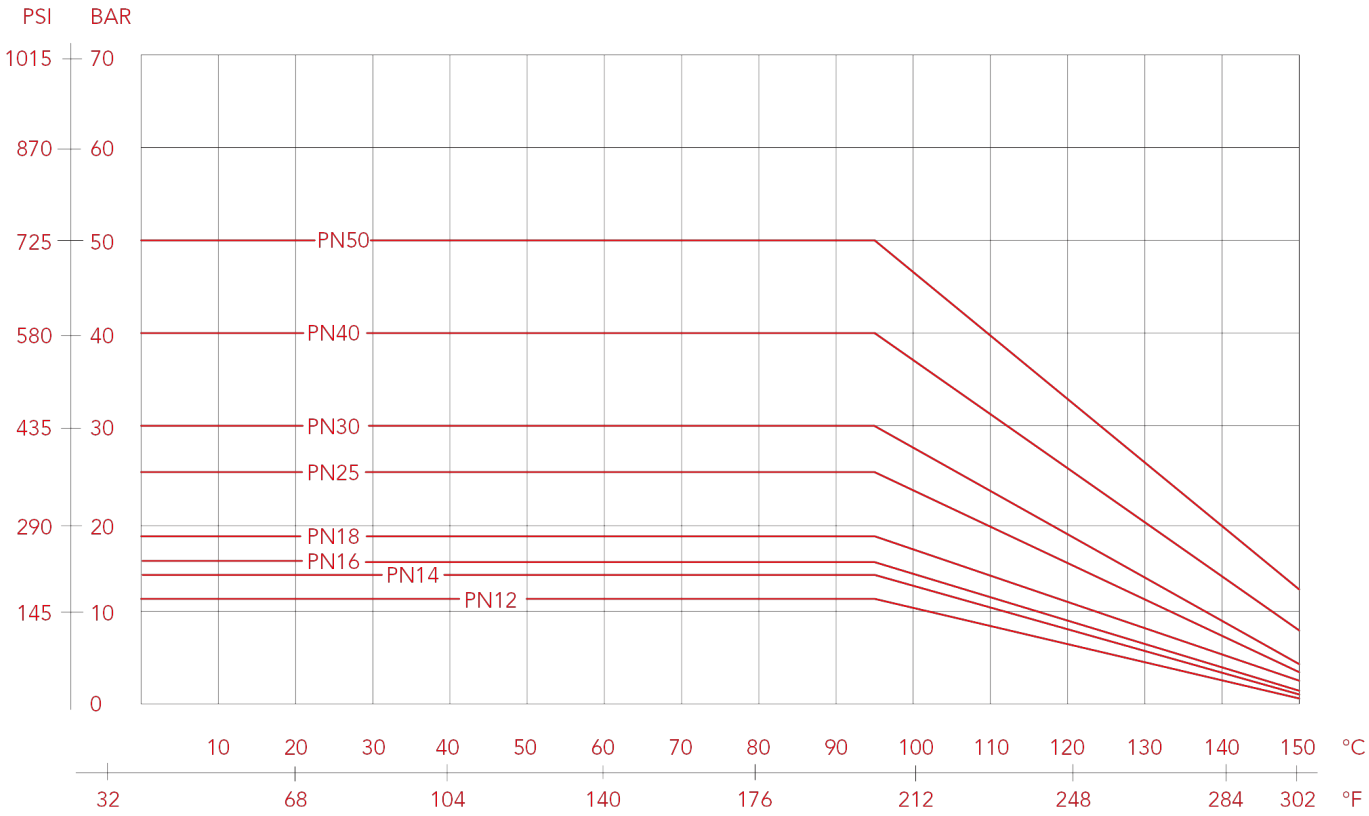

# ECOLOGICAL BALL VALVES: GREEN DVGW

## 379 Green DVGW ball valve, full flow

Ecological ball valves in compliance with the new European regulation for drinkable water.
Approved in accordance with standard EN 13828 and Code of Practice DVGW W 570 for the distribution of water intended for human consumption.
Equipped with a ball designed to avoid the stagnation of water and eventual proliferation of bacteria inside the valve.
MADE OF LOW LEAD BRASS.
GREEN DVGW
DRINKABLE WATER. ANTILEGIONNAIRE'S DISEASE.




| MEASURE | PRESSURE | CODE | PACKING |
|---|---|---|---|
| 1/4" (DN 8) | 50bar/725psi | 379B014LF02 | 15/180 |
| 3/8" (DN 10) | 50bar/725psi | 379B038LF02 | 15/180 |
| 1/2" (DN 15) | 50bar/725psi | 379B012LF02 | 10/120 |
| 3/4" (DN 20) | 40bar/580psi | 379B034LF02 | 8/72 |
| 1" (DN 25) | 40bar/580psi | 379B100LF02 | 6/48 |

### CERTIFICATIONS

### TECHNICAL SPECIFICATIONS

Male/female threads.
T handle in aluminium.
Body in nickel-plated brass.
Minimum and maximum working temperatures: -20°C, 150°C in absence of steam.
Female threads: ISO 7/1 Rp parallel (equivalent to DIN EN 10226-1 and BS EN 10226-1).
Male threads ISO 7/1 R taper (equivalent to DIN EN 10226-1 and BS EN 10226-1).

# ECOLOGICAL BALL VALVES: GREEN DVGW

## OVERALL DIMENSIONS

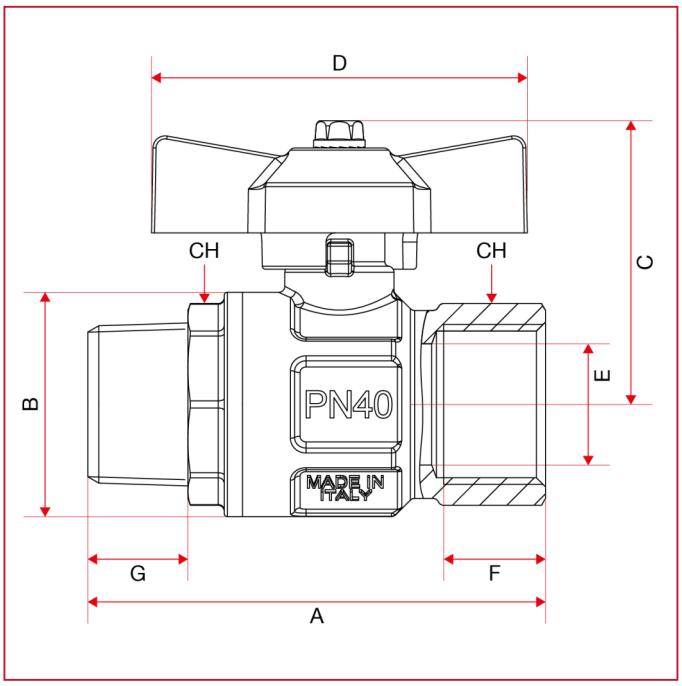


| | 1/4" | 3/8" | 1/2" | 3/4" | 1" |
|---|---|---|---|---|---|
| DN | 8 | 10 | 15 | 20 | 25 |
| A | 56,9 | 58,9 | 68 | 75,5 | 90,5 |
| B | 23,5 | 24 | 30,5 | 37 | 45,5 |
| C | 37,3 | 37,3 | 43,8 | 46,8 | 50,8 |
| D | 47 | 47 | 54 | 62 | 62 |
| E | 8 | 10 | 15 | 20 | 25 |
| F | 11 | 11,4 | 15 | 16,3 | 19,1 |
| G | 11 | 11,5 | 15 | 16,5 | 19 |
| CH | 18 | 21 | 25 | 31 | 38 |
| Kg/cm2 bar | 50 | 50 | 50 | 40 | 40 |
| LBS - psi | 725 | 725 | 725 | 580 | 580 |

# ECOLOGICAL BALL VALVES: GREEN DVGW

## MATERIALS

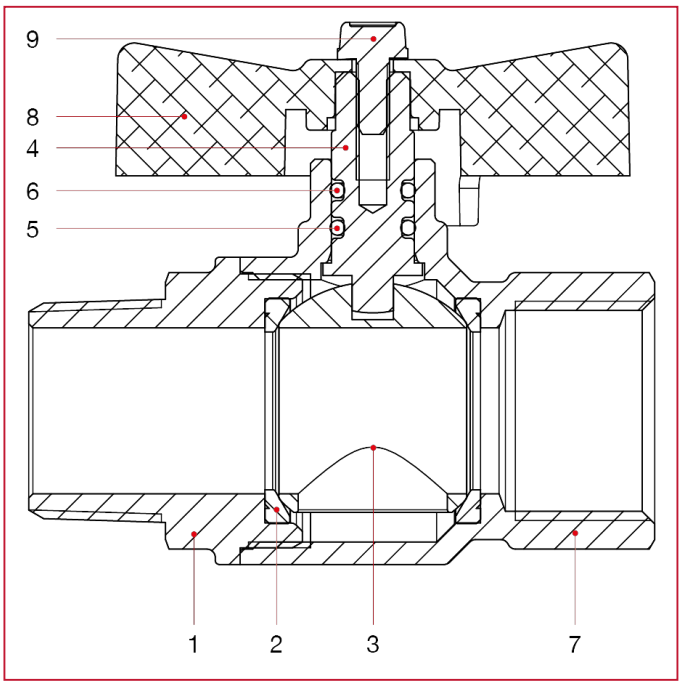


| POS. | DESCRIPTION | N. | MATERIAL |
|---|---|---|---|
| 1 | Male end adapter | 1 | Nickel-plated brass CW510L |
| 2 | Seat | 2 | P.T.F.E. |
| 3 | Ball | 1 | Chrome-plated brass CW510L |
| 4 | Stem | 1 | Brass CW510L |
| 5 | O-ring | 1 | NBR |
| 6 | O-ring | 1 | Viton® |
| 7 | Body | 1 | Nickel-plated brass CW510L |
| 8 | T handle | 1 | Varnished aluminium |
| 9 | Screw | 1 | Zinc-plated steel C4C |

# ECOLOGICAL BALL VALVES: GREEN DVGW

**INSTALLATION**

The itap S.p.A.'s valves are bi-directional, that means they manage the flow in both the directions.
The valves are composed by a ball, two seal in PTFE material, one stem, two sailing rings (O-Rings), one handle and a couple of parts made of brass (body and end adopter) that contain them and that are assembled by means of threat and a sealed material to obtain their aim.
In order to avoid that the sealed material gets broken and then the valve looses the connection between the body and the end-adapter, it's necessary to avoid to submit the two parts under the influence of a torque.
For the installation normal hydraulic practices must be used, and especially:
- ones have to be sure that the two pipes are correctly aligned;
- during the assembling process the installer has to apply its assembling tools at the end that is nearest to the pipe;
- the application of the sealing materials by the fitter (PTFE or hempen cloth) must be limited at the threat zone. An excess should interferes in the ball-gasket's closure zone, compromising the tightness.
- in the case that the fluid transported presents some impurities (dust, water too hard, etc.) ones have to remove these impurities by the means of a filter. Otherwise they could damage the seals.

DISASSEMBLY

To remove the valve from the pipe line or anyhow before to unscrew the junctions linked to it:
- wear the clothing protective normally required to work with the fluid transported within the line;
- depressurizze the line and operate in this way:
  - positioning the valve in opened position and than empty the line;
  - handle the valve to put down the residue pressure contained inside the space between the ball and the body before of remove it from the line;
  - during the disassembly apply the screw tool at the end of the valve nearest the pipe;

MAINTENANCE

Verify the valve periodically, according to its application's field and its works' field and its work's conditions, in order to be sure that the valve works correctly.

## LOSS DIAGRAM (With water)

| | 1/4" | 3/8" | 1/2" | 3/4" | 1" |
|---|---|---|---|---|---|
| KV | 3,21 | 4,88 | 15,32 | 25,96 | 41,29 |

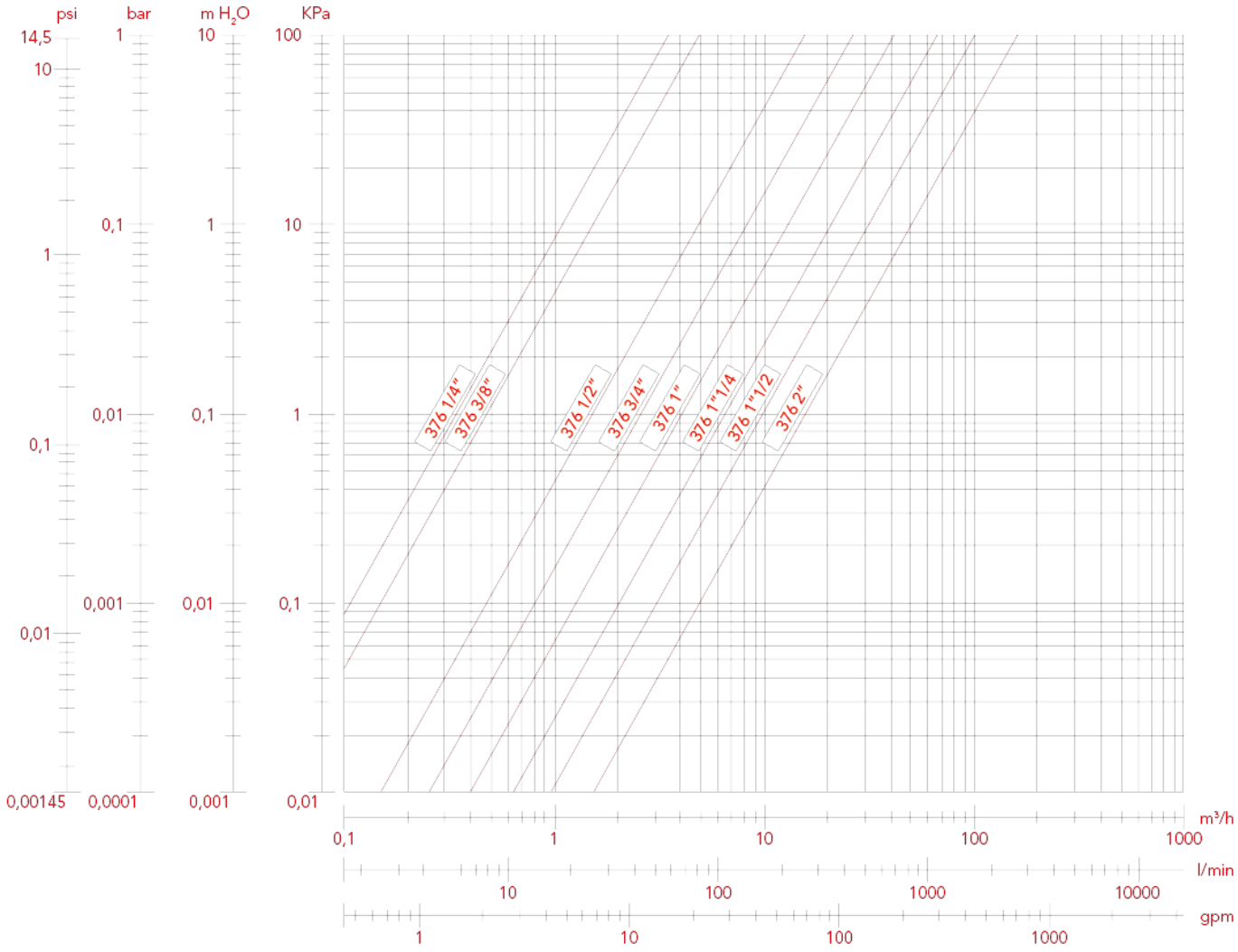

**PRESSURE-TEMPERATURE DIAGRAM**

The values shown by the dropping lines state the maximum limit of employment of the valves.
The shown values are approximate.

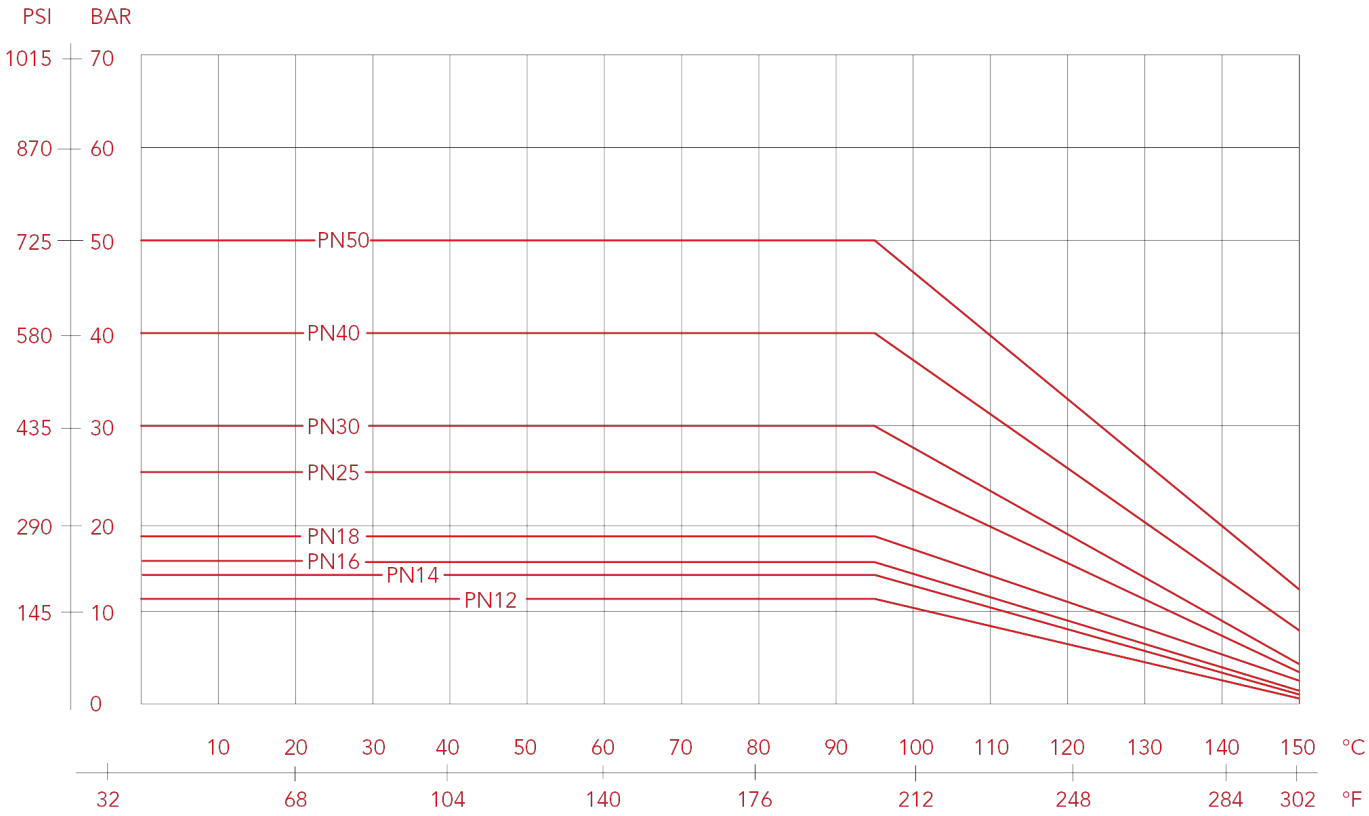

ITAP S.p.A.
Via Ruca 19
25065 Lumezzane
Brescia (ITALY)
Tel 030 8927011
Fax 030 8921990
www.itap.it - info@itap.it

We reserve the right to make improvements and changes to the products described herein and to the relative technical data, at any time and without forewarning.

rev. 20260505